NEW APPROVAL PARTS

MODEL : PS-5251-2DFS

REV : 01

DATE : 2003/3/12

PAGE : 1

TABLE NAME	ITEM	PARTNO	OLDPARTNO	DESCRIPTION	Q T Y	REASON	RESP. DEPT.
1. MAIN SOURCE FOR EE PARTS							
PL_S1	3003	130962	31-S1102KA06	C.MON 1000PF 100V K X7R 0603	1		
2. SECOND SOURCE FOR EE PARTS							
PL_MB	7004-B	134186	61-M38F	FAN 08S 12V 0.22A KD1208PTS1			
3. MAIN SOURCE FOR ME PARTS							
PL_MB	6013	601208	93-M52512DL4	LBL-SPS 70*55 HPS-5251-2DFS	1		
PL_MB	8004	136901	53-M52512MN3	MANUAL 297*210 PS-5251-2DFS	.125		

TOTAL 1 PAGES

簽: 劉仁成 3/18/03 陳志華 3/30/03 [illegible] 3/21/03 易世東 3/21/03

LITE-ON ELECTRONICS, INC. PS-5251-2DFS PROJECT MVT TECHNOLOGY TRANSFER LIST (YELLOW BOOK)

CUSTOMER: DELL NPPR NO. : N-030304 **REV. : 01** SAFETY : 3/21/03

ITEM	DESCRIPTION		REV	Q'TY	RECEIVE DATE FCST	RECEIVE DATE ACT	REMARK
1	OPEN ISSUE			1 PCS	/		OPTION
2	DESIGN CHANGE LIST		REV.: L01	1 PCS	/	02/24/03	
3	SCHEMATIC		EPS310845 X5	1 PCS	/	02/24/03	
4	PART LIST		REV.: 01	1 PCS	/	03/12/03	
5	CRITICAL COMPONENTS LIST/VENDOR LIST		REV.: 0G	2 PCS	/	02/12/03	
6	ENGINEERING SPEC.		REV.: A00-00	1 PCS	/	02/17/03	
7	PCB ARTWORK	S5251-2DS	REV.: A		3pcs	01/28/03	
		S5022-2D-1	REV.: A			01/29/03	
		S5022-2D-2	REV.: A			01/28/03	
8	OUTLINE DRAWING		3OSS00690 A	1 PCS	/	02/21/03	
9	PACKING DRAWING		3PSS00646 A	1 PCS	/	02/05/03	
10	COMPONENTS DRAWING			6 PCS	/		
11	EMI REPORT		REV.: X02	1 PCS	/	02/18/03	
12	PHASE / GAIN PLOT REPORT		REV.: X02	1 PCS	/	02/18/03	
13	COMPONENT STRESS REPORT		0302807/0302816	1 PCS	/	02/26/03	
14	HALT REPORT		NA	1 PCS	/		

ITEM	DESCRIPTION		REV	Q'TY	RECEIVE DATE FCST	RECEIVE DATE ACT	REMARK
15	β-TEST REPORT		D-030124	1 PCS	/	03/12/03	
16	QUALITY INSPECTION CRITERIA		QN-2002032	1 PCS	/	03/08/03	
17	MTR		REV.: X2	1 PCS	/	02/12/03	
18	ASSEMBLY DRAWING		3ASS00640 A	1 PCS	/	02/21/03	
19	SPECIAL ASSEMBLING INSTRUCTION		REV.: 05	1 PCS	/	02/24/03	
20	Cpk DATA FROM DVT TESTING		**PRR-0303003**	1 PCS	/	03/07/03	
21	FMEA REPORT		**NA**	1 PCS	/		
22	SOLDERABILITY QUALITY REPORT		**PRR-0303003**	1 PCS	/	03/07/03	
23	PROCESS MANAGEMENT PLAN		**REV.:A**	1 PCS	/	02/17/03	
24	SAFETY LICENSE	UL / NRTL			/		
		CSA / CUL			/		
		TUV / VDE			/		
		NEMKO			/		
		NORDIC			/		
		DENTORI			/		
		AUSTRALIA / CE MARK			/		
		CCIB			/		

PREPARED BY : 何月春

NPS-MR-C002

CONTENTS OF TECHNICAL DOCUMENT

CUSTOMER : **DELL**
MODEL NO : **PS-5251-2DFS**

DOC. NO : A302513
ISSUE DATE : 02/17/2003

DESCRIPTION	REF. NO.	REV. NO	PAGE	ISS. DATE.
1.0 FIELD TEST CONFIRMATION				
1.1 NPPR FROM SALES DEPARTMENT	N-030304	-	1	03/05/2003
2.0 DOCUMENT				
2.1 DESIGN CHANGE LIST	L01	-	1	02/24/2003
2.2 SCHEMATIC	EPS310845	X5	5	02/24/2003
2.3 PARTS LIST	-	01	12	03/12/2003
2.3.1 CRITICAL COMPONENT LIST	-	0G	4	02/12/2003
2.3.2 VENDOR LIST	-	0G	4	02/12/2003
2.4 PRODUCT SPECIFICATION	P0389	A00-00	28	02/17/2003
2.5 PCB ARTWORK(MB)	S5251-2DS	A	5	01/28/2003
PCB ARTWORK(S1)	S5022-2D-1	A	4	01/28/2003
PCB ARTWORK(S2)	S5022-2D-2	A	4	01/29/2003
2.6 OUTLINE DRAWING	3OSS00690	A	1	02/21/2003
2.7 PACKING DRAWING	3PSS00646	A	1	02/05/2003
3.0 CUSTOM PARTS' DRAWING				
3.1 LABEL (MAIN/BAR CODE/REV)				
3.1.1 LBL-SPS	493-601208	A	1	02/05/2003
3.1.2 LBL-SERL	493-117070	A	1	6/1/1994
3.1.3 LBL-CAUT	493-119794	A	1	3/1/1999
3.1.4 LBL-BAR	493--118390	B	1	8/31/2000
3.1.5 BAR CODE	393-116090	E	1	3/31/2000
3.2 MANUAL	353-136901	A	1	02/17/2003
3.3 CASE-TOP	132120	B		9/4/2002
CASE-BTM	131950	B		8/12/2002
3.4 BRACKET				
3.4.1 PCB	127672	B		4/29/2000
3.4.2 HS1&HS2	134365	B		9/10/2002
3.4.3 RT531	129956	B		11/29/2002
3.4.5 INLET	114434	B		9/18/1998
3.4.6 SB	123996	B		8/21/1998
3.4.7 SB	120342	B		4/14/1997
3.5 HEAT SINK				
3.5.1 HS1	131955	A		4/23/2002
3.5.2 HS2	131956	A		4/23/2002
3.6 INSULATION SHEET				
3.6.1 Q120,D280	121166	C		6/28/2000
3.6.2 UNDER,PFC	134362	A		6/3/2002
3.6.3 IC230,D201,D200,D220	121791	A		6/23/2000
3.6.4 IC230,D201,D200,D221	122885	B		11/27/2000
3.6.5 CASE-BTM	134125	A		4/20/2000
3.7 MAGNETICS				
3.7.1 T120	132576	A		6/3/2002
3.7.2 T501	132963	A		6/3/2002
3.7.3 L100	132519	B		11/6/2002

CONTENTS OF TECHNICAL DOCUMENT

CUSTOMER : **DELL**
MODEL NO : **PS-5251-2DFS**

DOC. NO : A302513
ISSUE DATE : 02/17/2003

DESCRIPTION	REF. NO.	REV. NO	PAGE	ISS. DATE.
3.7.4 L101	132520	A		**6/3/2002**
3.7.5 L102	132399	B		**9/26/2002**
3.7.6 L200	131970	B		8/29/2002
3.7.7 L201,282	117572	C		01/09/2003
3.7.8 L210	116440	B		10/29/1998
3.7.9 L280	132112	A		7/9/2002
3.7.10	135667	A		2/26/2003
3.7.11 L281	128200	C		6/14/2001
3.7.12 L501	116086	B		6/23/1995
3.7.13 Q120,D280	119280	A		12/11/1998
3.8 WIRE HARNESS				
3.8.1 J6,7,13,16,17,24,14,18,19,5,15,22,2 J21,304,302,303,D306	107939	F		6/20/2000
3.8.2 J4,2,3,2,3,11,12,9,10,,1,8,23,RV124	133965	A		4/25/2002
3.8.3 RT531	124511	Y		1/28/2003
3.8.4 SW100-1,SW100-2	120224	Z		12/19/2002
3.8.5 INLET(FG)	102973	D		5/27/1997
3.8.6 INLET(L)	118378	I		7/16/2002
3.8.7 INLET(N)	118379	I		7/16/2002
3.8.8 CN1	131924	A		7/2/2002
3.8.9 CN2	135929	A		03/05/2003
3.8.10 S1	112024	N		2/6/2002
3.8.11 S2	132563	N		2/6/2002
4.0 DFQ REPORT				
4.1 EMI TEST REPORT	PS-5251-2DFS	X02	2	02/18/2003
4.2 PHASE / GAIN PLOT	PS-5251-2DFS	X02	11	02/18/2003
4.3 COMPONENT STRESS REPORT	0302807	-	57	2/12/2003
MTBF TEST REPORT	0302816	-	33	02/26/2003
4.4 HALT REPORT	D-030124	-	35	同PS-5251-2DS
4.5 BETA TEST QUALIFICATION	NA			
4.6 QUALITY INSPECTION CRITIRIA	QN-2002032	A/A	12	同PS-5251-2DS
5.0 DFM REPORT				
5.1 MTR	PS-5251-2DFS	X2	10	02/12/2003
5.2 ASSEMBLING DRAWING	3ASS00640	A	1	02/21/2003
5.3 SPECIAL ASSEMBLING INSTRUCTION	-	05	2	02/24/2003
5.4 Cpk DATA REPORT / FMEA SHEET /	PRP-0303003	-	24	03/07/2003
PCB SOLDERING ABILITY REPORT	-	A	10	02/17/2003
5.5 PROCESS MAINAGEMENT PROJECT				

LITEON
POWER CONVERSION S&M

NPPR

TO : 工 程 部
CC : 王 副 總 / 企 劃 處
研 發 處 / 品 保 處

FM : 業 務 處
SUBJ : New Projects Production Request

NPPR No.: N-030304
DATE : March 05'03
Internal Order No.: 6000234 2DS / 6000015 2DTS
BUILD SITE: _____ Taiwan
_____ Malaysia
_____ Lite # 1

We have received customers final confirmation of purchasing order for our products. Relevant information are listed as below :

Part No : PS-5251-2DS / PS-5251-2DTS
Description : Dell 250W Skydive SATA

Customer : Dell Order No : _____
Date : _____ Total Order Quantity : _____

Request Delivery Schedule : _____
1. _____ 2. _____
3. _____ 4. _____
Average Capacity Per Month : 200K/M
Approval Sheet & Sample : _____
YES Per Attached
_____ NO (reason) : Project still in R&D

Should Customer Pay Following Charge Or Not ?
1. Tooling Charge _____ YES ___X___ NO
2. Sample Charge ___✓___ YES _____ NO

PLEASE TAKE YOUR PROMPT ACTION TO MEET THEIR REQUESTED SCHEDULE. IF YOU FIND ANY DIFFICULTY, YOU MUST LET US KNOW IN ADVANCE BY A RETURN MENO.

==========

REMARK :

SALES ENGINEER	SALES MANAGER	MKT'G & SALES DIR.	VICE PRESIDENT
			陳紀忠 3/6

MKS - MD - C015

DELL PFC 250W (PS-5251-2DFS) REVISION HISTORY CHANGE LIST

REV	M. Pcb	S1. Pcb	S2.PCB	Sch	Prt List	Change Item	Reason	Remark
PS-5251-2DF/L01	B	A	A	A	L01			
↓						change the outline connector to series ATA	from DELL's require	
						change partlist revision from L01(by skydive) to A	document update	
						Relayout PCB(MB) from B(skydive) to X1		
PS-5251-2DFS/X01	X1	A	A	X1	A			
PS-5251-2DFS/X01	X1	A	A	A	A			
↓						change the MTR to set OCP point	for improvement +12V OCP circuit	
						Add R124=0.005ohm		
						change the +12V output from 14A to 16A	from DELL's require	
						change the outline connector to AMP2X3	from DELL's require	
						change partlist revision from A to B	document update	
						Relayout PCB(MB) from X1 to X2		
						change the S1 and S2 to the same ps_5022_2d&2df		
PS-5251-2DFS/X02	X2	X1	X2	X2	B			
PS-5251-2DFS/X02	X2	X1	X2	X2	B			
↓						Add R338 = 200ohm and R339=6.2Kohm	for component stress improvement	
						Add second source	for LITEON quality and purchase requir	
						change the outline connector for P4	from DELL's require	
						change partlist revision from B to F	document update	
						Relayout PCB(MB) from X2 to X3		
						change the S1 from X1 to X2 and S2 from X2 to X3	from FMEA requir	
PS-5251-2DFS/X03	X3	X2	X3	X3	F			
PS-5251-2DFS/X03	X3	X2	X3	X3	F			
↓						change partlist revision from F to G	document update	
						Relayout PCB(MB) from X3 to A		
						change the S1 and S2 to A		
PS-5251-2DFS/L01	A	A	A	X4	G			
PS-5251-2DFS/L01	A	A	A	X4	G			
↓						change VR301 from 100Kohm to 200Kohm	for production control easily about regultion	
						add bead core with Q120(pin1) and C108	for design ripe	
						change partlist revision from G to H(L01)	document update	
PS-5251-2DFS/production	A	A	A	X5	H(L01)			

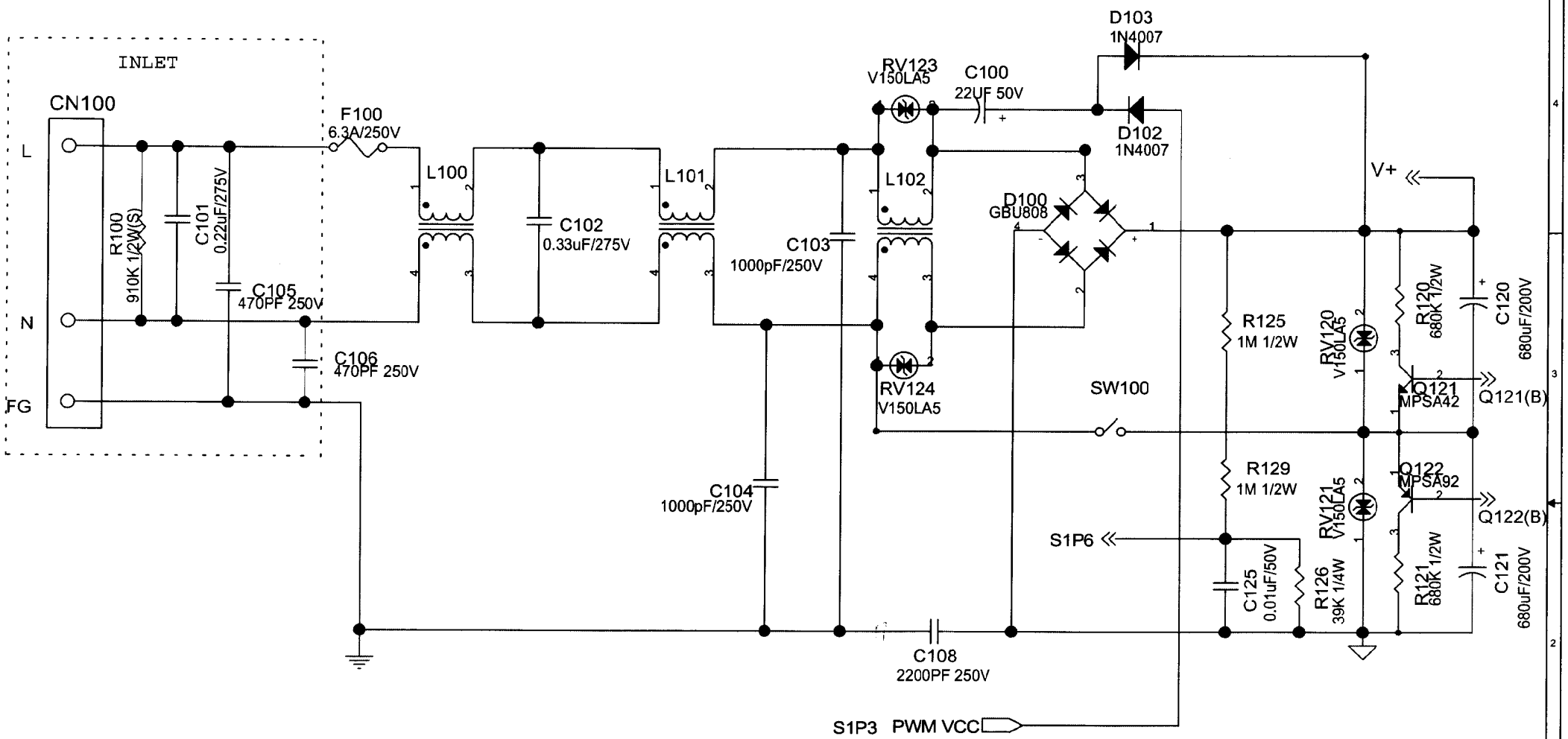

Draftsman	Checker	Copy to	LITEON ELECTRONICS, INC.
LC WANG 2/25/03			Model No.: PS-5251-2DFS (INLET)
Designer	Approver	Approved to Eng.	Size / Drawing No.: EPS310845 / Rev A
			Date: Tuesday, February 25, 2003 / Sheet 1 of 5

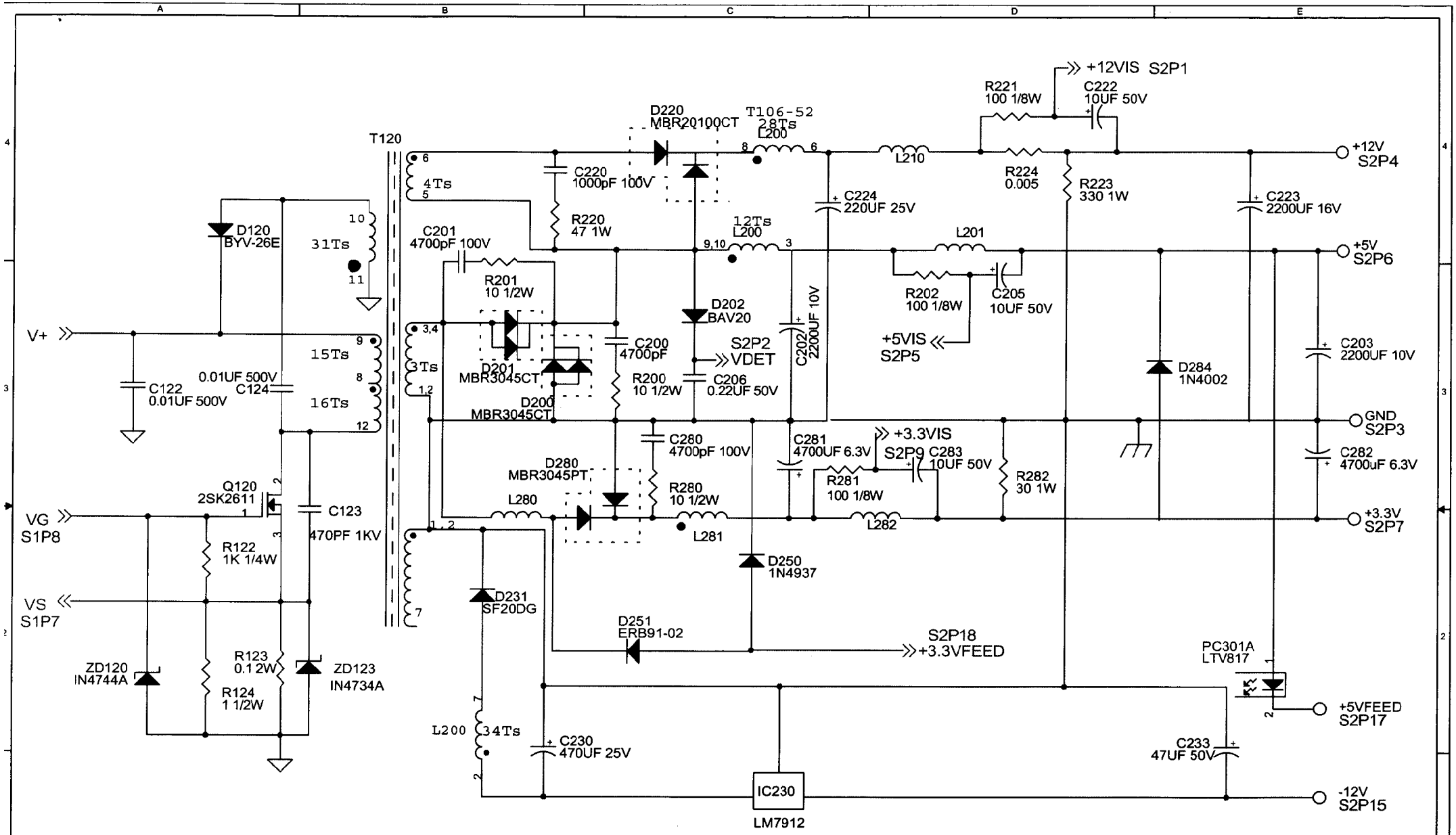

Draftsman	Checker	Copy to	LITEON ELECTRONICS, INC.
LC WANG 2/25/03			Model No.: PS-5251-2DFS (Main Board)
Designer	Approver	Approved fo Eng.	Size / Drawing No.: EPS310845 / Rev X5
			Date: Tuesday, February 25, 2003 / Sheet 2 of 5

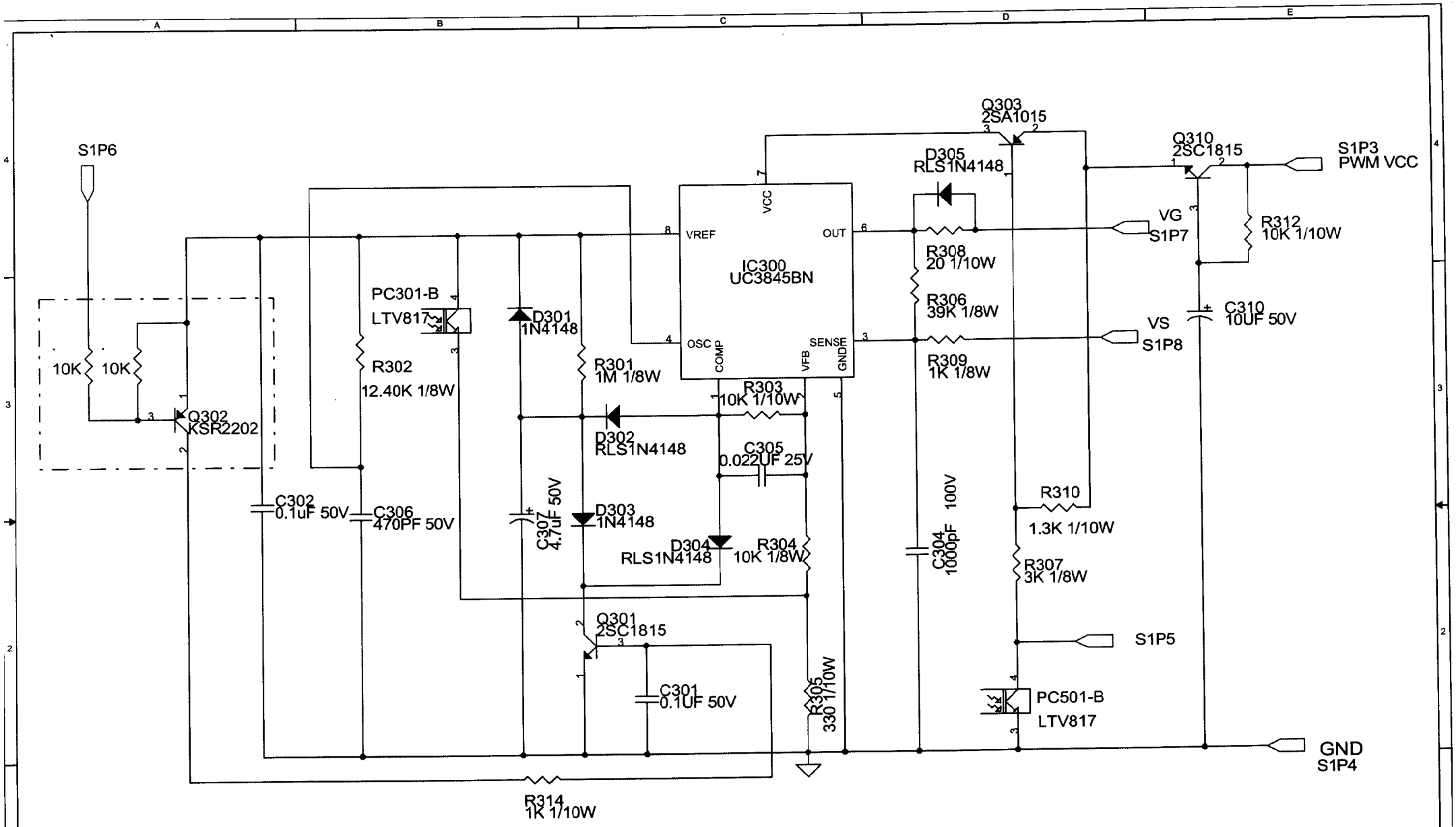

Draftsman	Checker	Copy to	LITEON ELECTRONICS, INC.
LC WANG 2/25/03	Joe 2/26/03		Model No.: PS-5251-2DFS (PWM)
Designer	Approver	Approved fo Eng.	Size / Drawing No.: EPS310845 / Rev XS
			Date: Tuesday, February 25, 2003 / Sheet 3 of 5

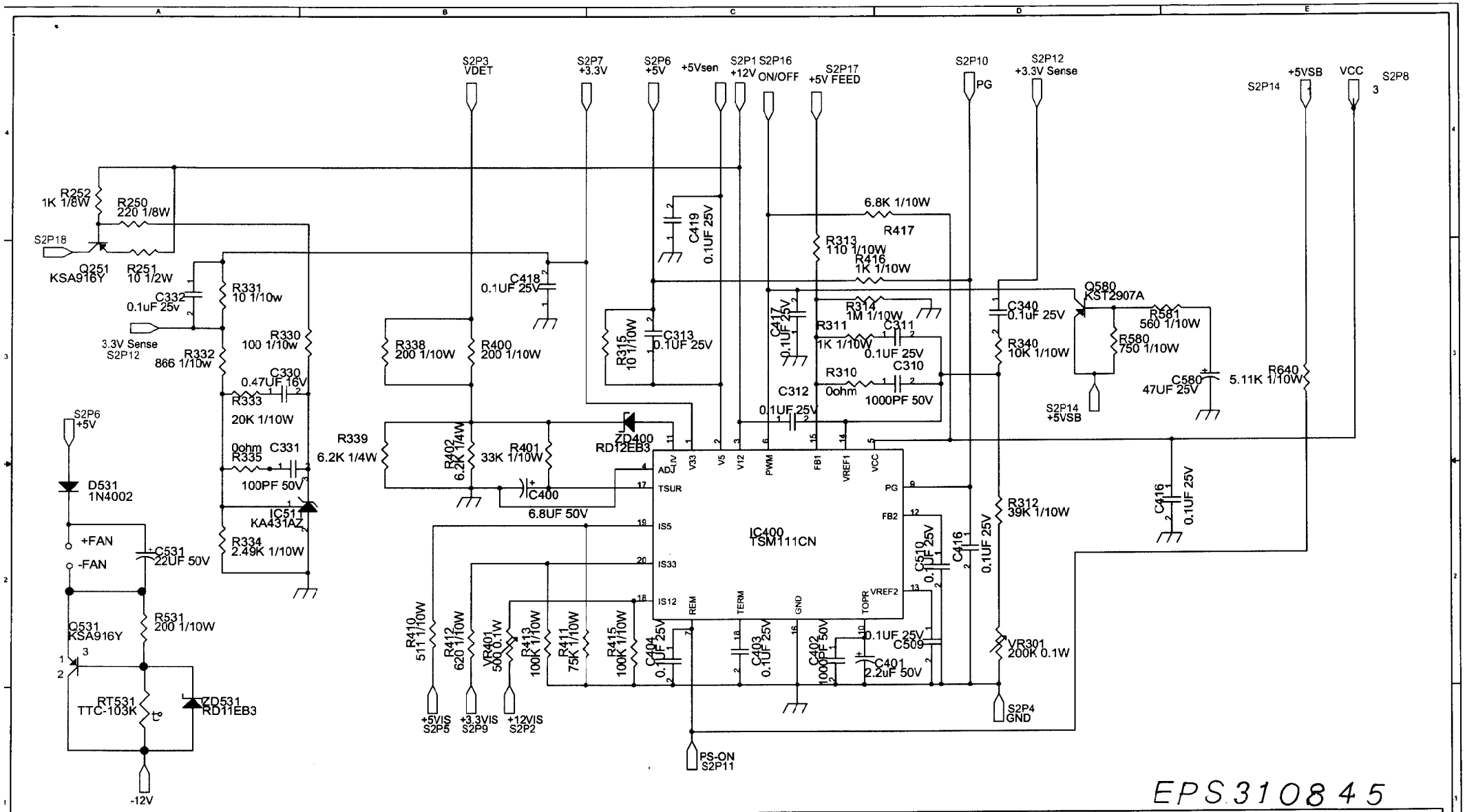

EPS310845

Draftsman: LC WANG 2/25/03	Checker: Joe 2/26	Copy to	**LITEON ELECTRONICS, INC.**
Designer: 2/26	Approver	Approved to Eng.	Model No.: **PS-5251-2DFS (Feedback & Protect)**
			Size / Drawing No.: / Rev.
			Date: Tuescay, February 25, 2003 — Sheet 4 of 5

2/26 03

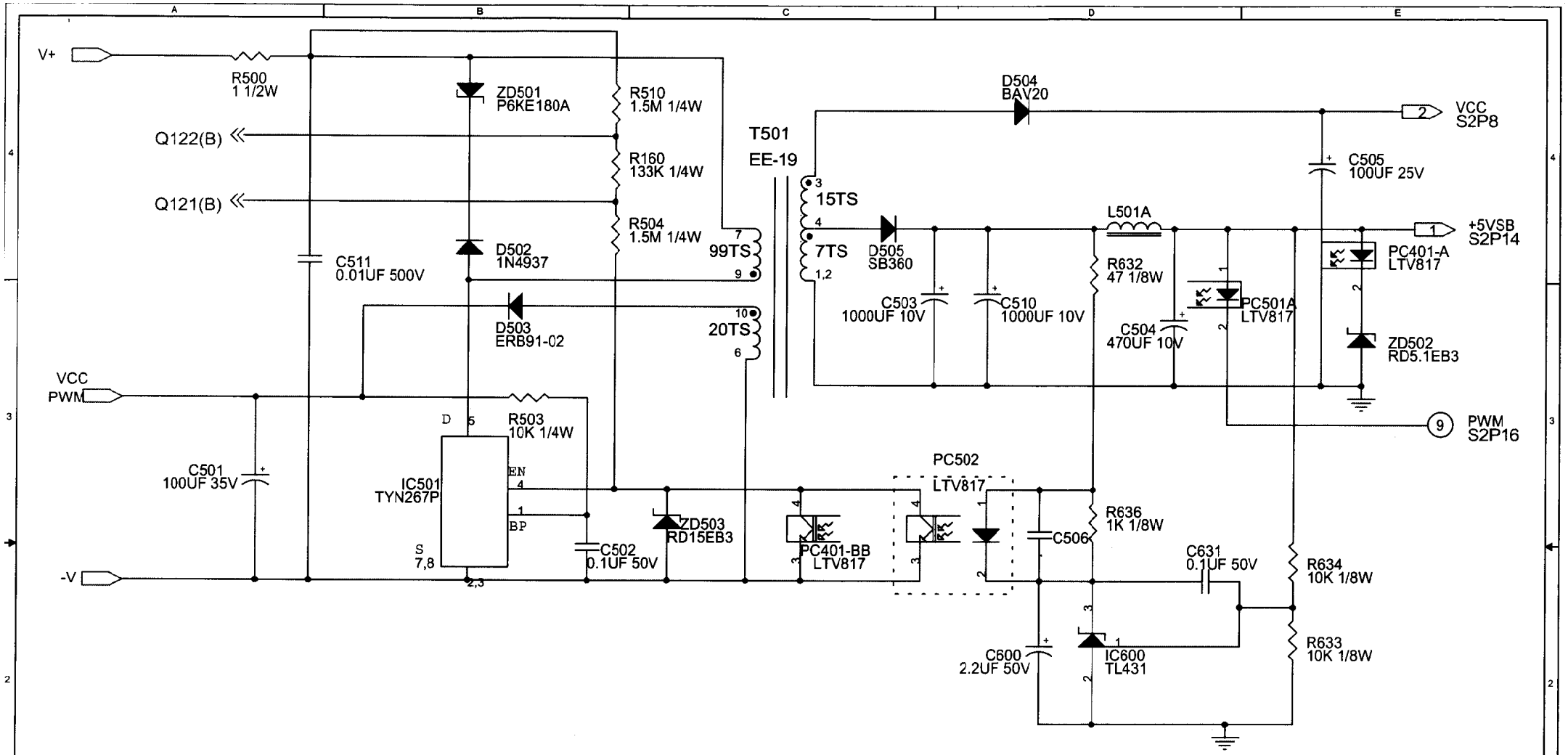

Draftsman	Checker	Copy to	LITEON ELECTRONICS, INC.
LC WANG 2/25/03	Joe 2/26/03		Model No.: PS-5251-2DFS (Stand-By)
Designer	Approver	Approved fo Eng.	Size / Drawing No.: EPS310845 / Rev X5
2/26/03			Date: Tuesday, February 25, 2003 / Sheet 5 of 5

LITE-ON ELECTRONICS, INC.
POWER CONVERSION

DOC STATUS

By Specific Model

DATE : 03/12/2003
PAGE : 1

MODEL : PS-5251-2DFS_MB
UPDATE : 03/12/2003

PLREV	DCN NO.	DCN DATE	CLASS OF CHANGE	SPEC REV	CKT REV	PCB REV	PACK REV	OUTSIDE REV	REASON FOR CHANGE	INITIATOR	DEPT
01	A302513	03/12/2003	RELEASE	REV:A00-00	EPS310845X5	REV.:A	3PSS00646 A	30SS00690 A		Tony Liu/Aeroson	SPS/ME

REASON FOR CHANGE : (1) PAPER CORRECTION (2) PURCHASING REQUEST (3) PRODUCTION REQUEST (4) STANDARDIZATION (5) COST REDUCTION (6) RELIABILITY (7) SAFETY REQUEST (8) CUSTOMER REQUEST (9) NEW IDEA (10) DESIGN CHANGE (11) STOCK SALVAGE (12) OTHER REASON

CLASS OF CHANGE :

A1 : Recall shiped products & Rework all Inventory and WIP.
A2 : Stop shipment & Rework all Inventory and WIP.
A3 : Rework Request as Sale's instruction.
B1 : Implement from next lot or within one week.
B2 : Implement within one month.
B3 : Implement from P/O #_____(Lot #_____).
B4 : Implement without obsolescence.
C1 : Implement from available.

TOTAL 1 PAGES

DESIGNER	陳志華 3/10/03

APPROVAL	Alan Yih 3/10/03

LITE-ON ELECTRONICS, INC.
POWER CONVERSION

DOC STATUS

By Specific Model

MODEL : PS-5251-2DFS_S1
UPDATE : 03/12/2003

DATE : 03/12/2003
PAGE : 1

PLREV	DCN NO.	DCN DATE	CLASS OF CHANGE	SPEC REV	CKT REV	PCB REV	PACK REV	OUTSIDE REV	REASON FOR CHANGE	INITIATOR	DEPT
01	A302513	03/12/2003	RELEASE	REV:A00-00	EPS310845X5	REV.:A	3PSS00646 A	30SS00690 A		Tony Liu/Aeroson	SPS/ME

REASON FOR CHANGE : (1) PAPER CORRECTION (2) PURCHASING REQUEST (3) PRODUCTION REQUEST (4) STANDARDIZATION (5) COST REDUCTION (6) RELIABILITY (7) SAFETY REQUEST (8) CUSTOMER REQUEST (9) NEW IDEA (10) DESIGN CHANGE (11) STOCK SALVAGE (12) OTHER REASON

CLASS OF CHANGE :

A1 : Recall shiped products & Rework all Inventory and WIP.
A2 : Stop shipment & Rework all Inventory and WIP.
A3 : Rework Request as Sale's instruction.
B1 : Implement from next lot or within one week.
B2 : Implement within one month.
B3 : Implement from P/O #_____(Lot #_____).
B4 : Implement without obsolescence.
C1 : Implement from available.

TOTAL 1 PAGES

DESIGNER	陳志華 3/20/03

APPROVAL	3/21/03

LITE-ON ELECTRONICS, INC.
POWER CONVERSION

DOC STATUS

By Specific Model

MODEL : PS-5251-2DFS_S2
UPDATE : 03/12/2003

DATE : 03/12/2003
PAGE : 1

PLREV	DCN NO.	DCN DATE	CLASS OF CHANGE	SPEC REV	CKT REV	PCB REV	PACK REV	OUTSIDE REV	REASON FOR CHANGE	INITIATOR	DEPT
01	A302513	03/12/2003	RELEASE	REV:A00-00	EPS310845X5	RE.:A	3PSS00646 A	30SS00690 A		Tony Liu/Aeroson	SPS/ME

REASON FOR CHANGE :
(1) PAPER CORRECTION (2) PURCHASING REQUEST (3) PRODUCTION REQUEST (4) STANDARDIZATION (5) COST REDUCTION (6) RELIABILITY
(7) SAFETY REQUEST (8) CUSTOMER REQUEST (9) NEW IDEA (10) DESIGN CHANGE (11) STOCK SALVAGE (12) OTHER REASON

CLASS OF CHANGE :
A1 : Recall shiped products & Rework all Inventory and WIP.
A2 : Stop shipment & Rework all Inventory and WIP.
A3 : Rework Request as Sale's instruction.
B1 : Implement from next lot or within one week.
B2 : Implement within one month.
B3 : Implement from P/O #_____(Lot #_____).
B4 : Implement without obsolescence.
C1 : Implement from available.

TOTAL 1 PAGES

DESIGNER	陳志華 3/20/03

APPROVAL	3/20/03 3/21/03

LITE-ON ELECTRONICS, INC.
POWER CONVERSION

DFM DOC STATUS

MODEL : PS-5251-2DFS
UPDATE : 03/12/2003

DATE : 03/12/2003
PAGE : 1

ISSUE NO.	ISSUE DATE	MTR	ASSY DRAW	S.A.I.	Cpk DOC	FMEA DOC	PMP	INITIATOR	DEPT
- YB-A302513	03/12/2003	REV.:X2	3ASS00640 A	REV.:05	0303003	NA	REV.:A	Tony Liu/Aeroson Chen	SPS/ME

Note: (1) S.A.I.:Special Assembling Instruction (2) FMEA:Failure Mode Effect Analysis (3) PMP:Process Management Project

TOTAL 1 PAGE

DESIGNER	陳志華 3/20/03
APPROVAL	3/21/03

LITE-ON ELECTRONICS, INC.
POWER CONVERSION

DFQ DOC STATUS

MODEL : PS-5251-2DFS
UPDATE : 03/12/2003

DATE : 03/12/2003
PAGE : 1

ISSUE NO.	ISSUE DATE	AFC	HALT	CSR	EMI	Phase/Gain	DQE	INITIATOR	DEPT
- YB-A302513	03/12/2003	NA	NA	0302816	REVX02	REVX02	D-030124	Tony Liu/Aeroson Chen	SPS/ME

Note: **(1) AFC:Application Feedback Collection** **(2) HALT:Highly Acceleration Life Test** **(3) CSR:Component Stress Report**
(4) DQE:Design Quality Evalution(including Alpha Test & Beta Test)

TOTAL 1 PAGE

DESIGNER	陳志華 3/10/'03
APPROVAL	3/12/'03

LITE-ON ELECTRONICS, INC.
POWER CONVERSION

PARTS LIST

MASS PRODUCTION

MODEL : PS-5251-2DFS MB
REV : 01
UPDATE : 03/12/2003

DATE : 03/12/2003

ITEM	U	F	R	C	PARTNO	OLD PART NO.	DESCRIPTION	MAKER	MAKER PART NO.	FILE NO.	LOCATION	QTY	L/T
1001					117645	33-R1N400713	DIO 1000V 1A 1N4007 D041	LITON	1N4007	RD-AP9812067D	D102,D103	2.00000	45
1001-A					124388	33-R1N400711	DIO 1000V 1A 1N4007 D041	MOTOR	1N4007	RD-AP9809062A		0.00000	60
1001-B					124389	33-R1N400712	DIO 1000V 1A 1N4007 D041	GS	1N4007	RD-AP9812097B		0.00000	60
1002			*		132964	32-TNY267P	IC PWM SW 8P TNY267P	PI	TNY267P	RD-AP0202128A	IC501	1.00000	0
1003			*		130366	33-RMBR3045C12	DIO 45V 30A MBR3045CT TO220	GS	MBR3045CT	RD-AP0112025A	D200,D201	2.00000	0
1003-A			*		130379	33-RSTPS304T19	DIO 45V 30A STPS3045CT TO220AB	STM	STPS3045CT	RD-AP0106100A		0.00000	0
1003-B			*		136491	33-RMBR3045C13	DIO 45V 30A MBR3045CT TO220	LITON	MBR3045CT	RD-AP0303072A		0.00000	0
1004		*	*		115571	LTV-817-PRB	IC PHO 4P LTV-817-PRB 130-260	LITON	LTV817-PRB	RD-AP9905007I	PC501,PC502,PC301,PC401	4.00000	45
1004-A			*		116910	32-PS25611VW	IC PHO 4P PS2561-1-V 130-260	NEC	PS2561-1-VW	RD-AP9910031D		0.00000	60
1005			*		120509	34-F2SK2611	MFET N 900V 9A 1.4 2SK2611	TOSHB	2SK2611	RD-AP9706153A	Q120	1.00000	30
1005-A			*		133260	34-FFQA9N9026	MFET N 900V 8.6A 1.3 FQA9N90	FAIRC	FQA9N90	RD-AP0204026A		0.00000	0
1005-B			*		133259	34-F2SK208242	MFET N 900V 9A 1.4 2SK2082-01	FUJI	2SK2082-01	RD-AP0208050A		0.00000	0
1006			*		123563	33-RMBR304512	DIO 45V 30A MBR3045PT TO3P	GS	MBR3045PT	RD-AP9811069A	D280	1.00000	60
1006-A			*		123562	33-RMBR304513	DIO 45V 30A MBR3045PT TO3P	LITON	MBR3045PT	RD-AP9812049A		0.00000	60
1006-B			*		123564	33-RSTPS304519	DIO 45V 30A STPS3045CW TO247	STM	STPS3045CW	RD-AP9901059A		0.00000	60
1008			*		128926	33-BGBU80813	BRG 800V 8A GBU808 LITON	LITON	GBU808	RD-AP0011100A	D100	1.00000	0
1008-A			*		110046	33-BGBU8K	BRG 800V 8A GBU8K GI	GI	GBU8K	RD-AP9109129		0.00000	60
1008-B			*		133050	33-BU8KBA80R52	BRG 800V 8A U8KBA80R	SHGEN	U8KBA80R	RD-AP0302141B		0.00000	0
1010					123692	33-E1N4734A11	Z.D 1W 5.6V 5% 1N4734A	MOTOR	1N4734A	RD-AP0205075G	ZD123	1.00000	60
1010-A					126867	33-E1N4734A12	Z.D 1W 5.32-5.88V 1N4734A	VGS	1N4734A	RD-AP0303012F		0.00000	60
1010-B					123691	33-E1N4734A15	Z.D 1W 5.32-5.88V 1N4734A	HITAH	1N4734A	RD-AP9811122A		0.00000	60
1012					123806	33-R1N493713	DIO 600V 1A 1N4937 D041	LITON	IN4937	RD-AP0203031G	D250,502	2.00000	60
1012-A					123807	33-R1N493712	DIO 600V 1A 1N4937 D041	GS	1N4937	RD-AP9902033B		0.00000	60
1012-B					128384	33-R1N493747	DIO 600V 1A 1N4937 D041	DII	1N4937	RD-AP0007079A		0.00000	0
1013			*		129077	33-RMBR2010013	DIO 100V 20A MBR20100CT TO220	LITON	MBR20100CT	RD-AP0104092A	D220	1.00000	0
1013-A			*		125296	33-RSTPS20H19	DIO 100V 20A STPS20H100CTTO220	STM	STPS20H100CT	RD-AP0004011A		0.00000	60
1013-B			*		130469	33-RMBR20H1G12	DIO 100V20AMBR20H100CTGTO220AB	GS	MBR20H100CTG	RD-AP0106078A		0.00000	0
1014					109864	33-RERB91-02	DIO 200V 1A ERB91-02 D041	FUJI	ERB91-02	RD-AP9101129	D251,503	2.00000	60
1014-A					125622	33-RUG1D12	DIO 200V 1A UG1D D0204AC	GS	UG1D	RD-AP9903059A		0.00000	60
1014-B					121975	33-RSF10DG	DIO 200V 1A SF10DG D041	LITON	SF10DG	RD-AP0209015B		0.00000	75
1015					100756	33-R1N400213	DIO 100V 1A 1N4002 D041	LITON	1N4002	RD-AP9812067D	D284	1.00000	60
1015-A					123542	33-R1N400212	DIO 100V 1A 1N4002 D0-204AL	GS	1N4002	RD-AP9804046A		0.00000	60
1015-B					125904	33-R1N400247	DIO 100V 1A 1N4002 D041	DII	IN4002	RD-AP0007008C		0.00000	45
1015-C					123443	33-R1N400211	DIO 100V 1A 1N4002 D041	MOTOR	1N4002	RD-AP9804074A		0.00000	60
1016					126774	33-RBAV2012	DIO 200V 0.25A BAV20 D035	GS	BAV20	RD-AP0012080B	D504	1.00000	60
1016-A					126865	33-RBAV2018	DIO 200V 0.25A BAV20 D035	PHLIP	BAV20	RD-AP0012079B		0.00000	60
1016-B					126548	33-RBAV2047	DIO 200V 0.25A BAV20 D035	DII	BAV20	RD-AP0012078C		0.00000	60
1017			*		134670	34-GKSP4226	TRX NPN 300V 0.5A KSP42 TO92	FAIRC	KSP42	RD-AP0303061A	Q121	1.00000	0
1017-A			*		133616	34-GMPSA4249	TRX NPN 300V 0.5A MPSA42 TO92	KEC	MPSA42	RD-AP0207043A		0.00000	0

LITE-ON ELECTRONICS, INC.
POWER CONVERSION

PARTS LIST

MASS PRODUCTION

MODEL : PS-5251-2DFS MB
REV : 01
UPDATE : 03/12/2003

DATE : 03/12/2003

ITEM	U	F	R	C	PARTNO	OLD PART NO.	DESCRIPTION	MAKER	MAKER PART NO.	FILE NO.	LOCATION	QTY	L/T
1017-B			*		134746	34-GMPSA4211	TRX NPN 300V 0.5A MPSA42 T092	ON	MPSA42	RD-AP0207040A		0.00000	0
1018			*		133617	34-GMPSA9249	TRX PNP 300V 0.5A MPSA92 T092	KEC	MPSA92	RD-AP0207042A	Q122	1.00000	0
1018-A			*		134652	34-GMPSA9218	TRX PNP 300V 0.1A MPSA92 T092	PHLIP	MPSA92	RD-AP0303001B		0.00000	0
1018-B			*		134747	34-GMPSA9211	TRX PNP 300V 0.5A MPSA92 T092	ON	MPSA92	RD-AP0207041A		0.00000	0
1021			*		123249	33-RSB36012	DIO 60V 3A SB360 D0201AD GS	GS	SB360	RD-AP9902023B	D505	1.00000	75
1021-A			*		123248	33-RSB36013	DIO 60V 3A SB360 D0201AD LITON	LITON	SB360	RD-AP9902021C		0.00000	75
1021-B			*		125905	33-RSB36047	DIO 60V 3A SB360 D0201AD	DII	SB360	RD-AP0007100B		0.00000	45
1022					123713	33-E1N4744A18	Z.D 1W 14.25-15.75V 1N4744A	PHLIP	1N4744A	RD-AP0205055B	ZD120	1.00000	60
1022-A					126926	33-E1N4744A12	Z,D 1W 14.25-15.75V 1N4744A	VGS	1N4744A	RD-AP0303012F		0.00000	60
1022-B					123712	33-E1N4744A15	Z.D 1W 14.25-15.75V 1N4744A	HITAH	1N4744A	RD-AP9811122A		0.00000	60
1023					124603	33-EP6KE180A12	TVS 600W 180V 5% P6KE180A	GS	P6KE180A	RD-AP0202130H	ZD501	1.00000	0
1023-A					124463	33-EP6KE180A13	TVS 600W 180V 5% P6KE180A	LITON	P6KE180A	RD-AP0208024F		0.00000	60
1023-B					128252	33-EP6KE180A11	TVS 600W 180V 5% P6KE180A	ON	P6KE180A	RD-AP0006165B		0.00000	0
1023-C					124547	33-EP6KE180A19	TVS 600W 180V 5% P6KE180A	STM	P6KE180A	RD-AP9811002A		0.00000	60
1025		*	*		120514	33-EV150LA5	ABSORBER 150V 2500A V150LA5	HARIS	V150LA5	RD-AP0207093E	RV120,RV121,RV123,RV124	4.00000	60
1025-A			*		125699	33-EV10K150	ABSORBER 150V 2500A V10K150	UEI	V10K150	RD-AP9910019A		0.00000	0
1025-B		*	*		108329	33-EZ151-04UL	ABSORBER 150V 2000A Z151-04UL	MAIDA	Z151-04UL	RD-AP0203123P		0.00000	60
1026			*		120874	33-RBYV-26E	DIO 1000V 1A BYV-26E	PHLIP	BYV-26E	RD-AP9706110B	D120	1.00000	60
1026-A			*		122842	33-RBYV-26E2	DIO 1000V 1A BYV-26E GI	VGS	BYV26E	RD-AP0207123B		0.00000	60
1026-B			*		128411	33-RBYV-26E12	DIO 1000V 1A BYV-26EGP GS	GS	BYV-26EGP	RD-AP0007012A		0.00000	0
1026-C			*		117087	33-RMUR1100E	DIO 1100V 1A MUR1100E D015	MOTOR	MUR1100E	RD-AP9405184A		0.00000	60
1027			*		120770	32-L7912ACV	IC REG-12V 1.5A 7912ACV T0220	STM	L7912ACV	RD-AP0007026B	IC230	1.00000	90
1027-A			*		123507	32-LM7912CT22	IC REG3P-12V1.5A LM7912CTT0220	NS	LM7912CT	RD-AP0006155B		0.00000	60
1031			*		120747	33-RUG2D	DIO 200V 2A UG2D D015	GI	UG2D	RD-AP9612080A	D231	1.00000	45
1031-A			*		121976	33-RSF20DG	DIO 200V 2A SF20DG D015	LITON	SF20DG	RD-AP9710034A		0.00000	75
1031-B			*		128389	33-RSF20DG47	DIO 200V 2A SF20DG D015	DII	SF20DG	RD-AP0009003C		0.00000	0
1032					126865	33-RBAV2018	DIO 200V 0.25A BAV20 D035	PHLIP	BAV20	RD-AP0012079B	D202	1.00000	60
1032-A					126548	33-RBAV2047	DIO 200V 0.25A BAV20 D035	DII	BAV20	RD-AP0012078C		0.00000	60
1032-B					126774	33-RBAV2012	DIO 200V 0.25A BAV20 D035	GS	BAV20	RD-AP0012080B		0.00000	60
1034					123665	33-ERD5.1EB316	Z.D 1/2W 5.12-5.35V RD5.1EB3	NEC	RD5.1EB3	RD-AP0101058G	ZD502	1.00000	60
1034-A					123666	33-EHZ5C315	Z.D 1/2W 5.10-5.30V HZ5C3	HITAH	HZ5C3	RD-AP0301105Q		0.00000	60
1034-B					131219	33-ETZX5V1D24	Z.D 1/2W 5.1-5.3V TZX5V1D	VISHY	TZX5V1D	RD-AP0108174A		0.00000	0
1035			*		116337	32-KA431AZ	IC REF 3P 2.495V KA431AZ(+-1%)	FAIRC	KZ431AZ	RD-AP0302112E	IC600	1.00000	60
1035-A			*		126574	32-KIA431A49	IC REF 3P 2.495V KIA431A1%T092	KEC	KIA431A	RD-AP9910101A		0.00000	60
1035-B			*		122671	32-TL431ACLP11	IC REF 3P TL431ACLP(+-1%)MOTOR	ON	TL431ACLP	RD-AP0104022D		0.00000	75
1035-C			*		122678	32-TL431ACLP01	IC REF 3P TL431ACLP (+-1%) TI	TI	TL431ACLP	RD-AP9802072A		0.00000	75
1036					123616	33-ERD15EB316	Z.D 1/2W 14.42-15.02V RD15EB3	NEC	RD15EB3	RD-AP0101058G	ZD503	1.00000	60
1036-A					131267	33-ETZX15B24	Z.D 1/2W 14.5-15.1V TZX15B	VISHY	TZX15B	RD-AP0108174A		0.00000	0
1036-B					123617	33-EHZ15-215	Z.D 1/2W 14.50-15.10V HZ15-2	HITAH	HZ15-2	RD-AP0301105Q		0.00000	60

LITE-ON ELECTRONICS, INC.
POWER CONVERSION

PARTS LIST

MASS PRODUCTION

MODEL : PS-5251-2DFS_MB
REV : 01
UPDATE : 03/12/2003

DATE : 03/12/2003
PAGE : 3

ITEM	U	F	R	C	PARTNO	OLD PART NO.	DESCRIPTION	MAKER	MAKER PART NO.	FILE NO.	LOCATION	QTY	L/T
2001					127063	30-FV914J2SS5	R.HV 910K 1/2W(S) JRMS1KVFTABT	FTABT	RSS-1/2W-910K	RD-AP0301172B	R100(ON INLET)	1.00000	0
2002					101901	30-FA684J4M55	R.CF 680K 1/4W J	QUMAO	30-FA684J4M55	RD-AP0102080M	R120,121	2.00000	30
2003					119747	30-FG10BJBF78	R.MO 0.1 2W J F78	QUMAO	30-FG10BJBF78	RD-AP0105054K	R123	1.00000	30
2004					116545	30-FA102J4M55S	R.CF 1K 1/4W(S) J	QUMAO	30-FA102J4M55S	RD-AP0102080M	R122	1.00000	35
2005					116516	30-FG10AJ2M63S	R.MO 1 1/2W(S) J	QUMAO	30-FG10AJ2M63S	RD-AP0106023Q	R124	1.00000	35
2006					130402	30-FC134F4SA3S	R.MF 133K 1/4W(S) F	QUMAO	30-FC134F4SA3S	RD-AP0102079J	R160	1.00000	0
2007		*			122858	30-FA393J4M55S	R.CF 39K 1/4W(S) J	QUMAO	30-FA393J4M55S	RD-AP0102080M	R126	1.00000	30
2008					115826	30-FG100J2M63S	R.MO 10 1/2W(S) J M63	QUMAO	30-FG100J2M63S	RD-AP0106023Q	R200,201,280	3.00000	30
2009					107696	30-FA101J8SA	R.CF 100 1/8W J 3.3	QUMAO	30-FA101J8SA	RD-AP0102080M	R202,221,281	3.00000	30
2010					117389	30-FG470JASS	R.MO 47 1W(S) J	QUMAO	30-FG470JASS	RD-AP0106023Q	R220	1.00000	30
2016					116516	30-FG10AJ2M63S	R.MO 1 1/2W(S) J	QUMAO	30-FG10AJ2M63S	RD-AP0106023Q	R500	1.00000	35
2017					128659	30-FG331JAM77S	R.MO 330 1W(S) J M77	QUMAO	30-FG331JAM77S	RD-AP0106023Q	R223	1.00000	0
2018					125347	30-FZ50DJ16	R.ZW 0.005 1.6D J 5.0 CN30W	TAI	MR16KHA0050P	RD-AP0008034B	R224	1.00000	30
2019					125196	30-FA155J4M55S	R.CF 1.5M 1/4W(S) J	QUMAO	30-FA155J4M55S	RD-AP0102080M	R504,R510	2.00000	30
2022					105675	30-FA103J8SA	R.CF 10K 1/8W J 3.3	QUMAO	30-FA103J8SA	RD-AP0102080M	R503	1.00000	30
2025					117391	30-FG300JASS	R.MO 30 1W(S) J	QUMAO	30-FG300JASS	RD-AP0106023Q	R282	1.00000	30
2026					116539	30-FG105J2M63S	R.MO 1M 1/2W(S) J	QUMAO	30-FG105J2M63S	RD-AP0106023Q	R125,R129	2.00000	35
2028					113745	30-FJ103K01	R.TH TTC 10K K 5D 22MA	THINK	TTC-103K	RD-AP0205087B	RT531	1.00000	45
2029					107725	30-FA470J8SA	R.CF 47 1/8W J 3.3	QUMAO	30-FA470J8SA	RD-AP0102080M	R632	1.00000	30
2030					105675	30-FA103J8SA	R.CF 10K 1/8W J 3.3	QUMAO	30-FA103J8SA	RD-AP0102080M	R633,R634	2.00000	30
2031					105676	30-FA102J8SA	R.CF 1K 1/8W J 3.3	QUMAO	30-FA102J8SA	RD-AP0102080M	R636	1.00000	30
3001					135108	31-FE334KB5511	C.MEX 0.33UF 275V K 15 MKP	HJC	MKP334K0275AB1	RD-AP0208167F	C102	1.00000	0
3001-A					131532	31-FE334KB560	C.MEX 0.33UF 275V K 15 LE	OKAYA	LE334-L35	RD-AP0202057A		0.00000	0
3001-B					126058	31-FE334MB5542	C.MEX 0.33UF 275V M 15 R46	ARCO	R46KI333045M1M	RD-AP0209043E		0.00000	45
3001-C					130324	31-FE334KB5502	C.MEX 0.33UF 275V K 15 KNB1560	ISKRA	KNB1560-0.33UF	RD-AP0208184C		0.00000	0
3002					134917	31-F1222MB5543	C.DIS 2200PF 250V M E 7.5 KY	MURTA	E3KY222MA2M02	RD-AP0209067A	C108	1.00000	0
3002-A					128427	31-F1222MB571	C.DIS 2200PF 250V M F 7.5 AC	PNOVR	AC10F222ML7	RD-AP0202120C		0.00000	0
3002-B		*			113602	31-F1222MB558	C.DIS 2200PF 250V M E 7.5 CS	TDK	CS11E2GA222MYGS	RD-AP0207174K		0.00000	60
3004			*		136890	31-F7681VB066	C.ELE 680UF 200V V 22*45 SPS	OST	SPS687200V2245	RD-AP0303077D	C120,C121	2.00000	0
3004-A			*		110107	31-F7681VB052	C.ELE 680UF 200V V 22*45 SMH	NCC	SMH200VSSN680V	RD-AP0205010Q		0.00000	60
3004-B			*		109428	31-F7681VB056	C.ELE 680UF 200V V 22*45 TS UP	MATSU	ECEC2DP681GY	RD-AP0206012I		0.00000	60
3005					134916	31-F1102MB5541	C.DIS 1000PF 250V M E 7.5 KY	MURTA	E3KY102MA2M02	RD-AP0209067A	C103,C104	2.00000	0
3005-A					128426	31-F1102KB571	C.DIS 1000PF 250V K B 7.5 AC	PNOVR	AC10B102KL7	RD-AP0202120C		0.00000	0
3005-B					113601	31-F1102KB558	C.DIS 1000PF 250V K B 7.5 CS	TDK	CS10B2GA102KYGS	RD-AP0207174K		0.00000	60
3006					130323	31-FE224KB550	C.MEX 0.22UF 275V K 15 KNB1560	ISKRA	KNB1560-0.22UF	RD-AP0208184C	C101(on INLET)	1.00000	0
3006-A					126049	31-FE224KB5512	C.MEX 0.22UF 275V K 15 MKP	HJC	MKP224K275AB1	RD-AP0208167F		0.00000	30
3006-B					133291	31-FE224KB560	C.MEX 0.22UF 275V K 15 LE	OKAYA	LE224-L35	RD-AP0202057A		0.00000	0
3006-C					126057	31-FE224MB5542	C.MEX 0.22UF 275V M 15 R46	ARCO	R46KI322045M2M	RD-AP0209043E		0.00000	45
3007					112684	31-F7220M50522	C.ELE 22UF 50V M 5*11 5T 105C	NCC	KME50VB-22M	RD-AP02121116	C100	1.00000	60

LITE-ON ELECTRONICS, INC.
POWER CONVERSION

PARTS LIST

MASS PRODUCTION

MODEL : PS-5251-2DFS_MB
REV : 01
UPDATE : 03/12/2003

DATE : 03/12/2003

ITEM	U	F	R	C	PARTNO	OLD PART NO.	DESCRIPTION	MAKER	MAKER PART NO.	FILE NO.	LOCATION	QTY	L/T
3008					100585	31-F1103K50	C.MON 0.01UF 50V K X7R 5T	BC	K103K15X7RF5TH5	RD-AP0209044J	C125	1.00000	45
3009					101455	31-FM472KA0	C.PEI 4700PF 100V K 5T	FARAD	E0L100D472KB	RD-AP0004086K	C201,280	2.00000	45
3010					102032	31-F1472K50	C.MON 4700PF 50V K X7R 5T	BC	K472K15X7RF5TH5	RD-AP0209044J	C200	1.00000	45
3011					129273	31-F7222M10661	C.ELE 2200UF 10V M 13*20 RLS5	OST	RLS228010M1220	RD-AP0303076F	C202,203	2.00000	0
3011-A					132688	31-F7222M1070	C.ELE 2200UF 10V M 12.5*20 LZG	LTEC	ZGR1AM222J20	RD-AP0211236C		0.00000	0
3011-B					124850	31-F7222M10581	C.ELE 2200UF 10V M 12.5*20 YXG	RUBCO	10YXG2200	RD-AP0301080S		0.00000	45
3011-C					128994	31-F7222M10526	C.ELE 2200UF 10V M 12.5*20 KY	NCC	KY10VB2200M	RD-AP0301051H		0.00000	0
3012					129287	31-F7470M5066	C.ELE 47UF 50V M 6.3*11 RLS5T	OST	RLS476050M0611	RD-AP0303076F	C233	1.00000	0
3012-A					122142	31-F7470M50581	C.ELE 47UF 50V M 6.3*11 YXF	RUBCO	50YXF47M	RD-AP0210148S		0.00000	75
3012-B					132471	31-F7470M5070	C.ELE 47UF 50V M 6.3*11 LZG 5T	LTEC	ZGR1HM470D11	RD-AP0211236C		0.00000	0
3012-C		*			122269	31-F7470M50522	C.ELE 47UF 50V M 6.3*11 KMF	NCC	KMF50VB-47M	RD-AP02112080		0.00000	60
3013					112887	31-F7100M50522	C.ELE 10UF 50V M 5*11 5T 105C	NCC	KME50VB-10M	RD-AP02121116	C205,222,283	3.00000	60
3014					117262	31-F1224K50	C.MON 0.22UF 50V K X7R 5T	BC	K224K20X7RF5RH5	RD-AP0209044J	C206	1.00000	60
3015					123135	31-F1102KA0	C.MON 1000PF 100V K X7R 5T	BC	K102K15X7RH5RH5	RD-AP0209044J	C220	1.00000	0
3016					131383	31-F7222M16525	C.ELE 2200UF 16V M 12.5*25 KY	NCC	KY16VB2200M	RD-AP0301051H	C223	1.00000	0
3016-A					132698	31-F7222M1670	C.ELE 2200UF 16V M 12.5*25 LZG	LTEC	ZGR1CM222J25	RD-AP0211236C		0.00000	0
3016-B					127572	31-F7222M1666	C.ELE 2200UF 16V M 13*25 RLS	OST	RLS228016M1325	RD-AP0303076F		0.00000	0
3016-C					124854	31-F7222M16583	C.ELE 2200UF 16V M 12.5*25 YXG	RUBCO	16YXG2200	RD-AP0301080S		0.00000	45
3017					134915	31-F1471KB554	C.DIS 470PF 250V K B 7.5 KY	MURTA	B3KY471KA2M02	RD-AP0209067A	C105,C106(on INLET)	2.00000	0
3017-A		*			113600	31-F1471KB558	C.DIS 470PF 250V K B 7.5 CS	TDK	CS85B2GA471KYGS	RD-AP0207174K		0.00000	60
3021					127561	31-F7472M0666	C.ELE 4700UF 6.3V M 13*30 RLS	OST	RLS4786R3M1330	RD-AP0303076F	C281,C282	2.00000	0
3021-A					127407	31-F7472M0667	C.ELE 4700UF 6.3V M12.5*31.5PW	TACON	CPW0J472ML	RD-AP0112046G		0.00000	45
3021-B					128997	31-F7472M06522	C.ELE 4700UF 6.3V M 12.5*30 KY	NCC	KY6.3VB4700M	RD-AP0301051H		0.00000	0
3021-C					132677	31-F7472M0670	C.ELE 4700UF 6.3VM12.5*31.5LZG	LTEC	ZGR0JM472J31	RD-AP0211236C		0.00000	0
3024					132480	31-F7101M35701	C.ELE 100UF 35V M 8*11.5 LZG5T	LTEC	ZGR1VM101F11	RD-AP0211236C	C501	1.00000	0
3024-A					129279	31-F7101M3566	C.ELE 100UF 35V M 8*12 RLS 5T	OST	RLS107025M0812	RD-AP0303076F		0.00000	0
3024-B					126917	31-F7101M3558	C.ELE 100UF 35V M 8*11.5 YXF	RUBCO	35YXF100M	RD-AP0210148S		0.00000	60
3024-C					133886	31-F7101M35523	C.ELE 100UF 35V M 8*11.5 KMF	NCC	KMF35VB-100M	RD-AP02112080		0.00000	0
3026					101756	31-F1104K50	C.MON 0.1UF 50V K X7R 5T	BC	K104K20X7RF5TH5	RD-AP0209044J	C502	1.00000	60
3027					129470	31-F7101M2567	C.ELE 100UF 25V M 6.3*11 PW 5T	TACON	CPW1E101ML	RD-AP0112046G	C505	1.00000	0
3027-A					132485	31-F7101M2570	C.ELE 100UF 25V M 6.3*11 LZG5T	LTEC	ZGR1EM101E11	RD-AP0211236C		0.00000	0
3027-B					120742	31-F7101M25581	C.ELE 100UF 25V M 6.3*11 YXF	RUBCO	25YXF100M	RD-AP0210148S		0.00000	30
3027-C					121174	31-F7101M25525	C.ELE 100UF 25V M 6.3*11 KMF5T	NCC	KMF25VB-100M	RD-AP02112080		0.00000	60
3028					125838	31-F7102M10584	C.ELE 1000UF 10V M 8*20 YXG 5T	RUBCO	10YXG1000	RD-AP0301080S	C510	1.00000	60
3028-A					132686	31-F7102M10702	C.ELE 1000UF 10V M 8*20 LZG 5T	LTEC	ZGR1AM102F20	RD-AP0211236C		0.00000	0
3028-B					127575	31-F7102M1066	C.ELE 1000UF10V M8*20RLS5T	OST	RLS108010M0820	RD-AP0303076F		0.00000	0
3029					131021	31-F7471M1066	C.ELE 470UF 10V M 8*12 RLS	OST	RLS47010M0812	RD-AP0303076F	C504	1.00000	0
3029-A					131983	31-F7471M10583	C.ELE 470UF 10V M 8*11.5 5TYXG	RUBCO	10YXG470	RD-AP0301080S		0.00000	0
3029-B					132683	31-F7471M10701	C.ELE 470UF 10V M 8*11.5 LZG5T	LTEC	ZGR1AM471F11	RD-AP0211236C		0.00000	0

LITE-ON ELECTRONICS, INC.
POWER CONVERSION

PARTS LIST

MASS PRODUCTION

MODEL : PS-5251-2DFS MB
REV : 01
UPDATE : 03/12/2003

DATE : 03/12/2003
PAGE : 5

ITEM	U	F	R	C	PARTNO	OLD PART NO.	DESCRIPTION	MAKER	MAKER PART NO.	FILE NO.	LOCATION	QTY	L/T
3030					124849	31-F7102M10583	C.ELE 1000UF 10V M 10*16 YXG	RUBCO	10YXG1000	RD-AP0301080S	C503	1.00000	45
3030-A					127576	31-F7102M10661	C.ELE 1000UF 10V M 10*16 RLS	OST	RLS108010M1016	RD-AP0303076F		0.00000	0
3030-B					131380	31-F7102M10528	C.ELE 1000UF 10V M 10*16 KY	NCC	KY10VB1000M	RD-AP0301051H		0.00000	0
3030-C					132687	31-F7102M1070	C.ELE 1000UF 10V M 10*16 LZG	LTEC	ZGR1AM102G16	RD-AP0211236C		0.00000	0
3032					127574	31-F7471M2566	C.ELE 470UF 25V M 10*16 RLS	OST	RLS477025M1016	RD-AP0303076F	C230	1.00000	0
3032-A					124855	31-F7471M25582	C.ELE 470UF 25V M 10*16 YXG	RUBCO	25YXG470	RD-AP0301080S		0.00000	45
3032-B					132494	31-F7471M25702	C.ELE 470UF 25V M 10*16 LZG	LTEC	ZGR1EM471G16	RD-AP0211236C		0.00000	0
3036					108987	31-F1471KAK	C.DIS 470PF 1KV K Y5P 5T	NICLA	N5Y5P1B471K	RD-AP0301092W	C123	1.00000	45
3037					115976	31-F1103ME052	C.DIS 0.01UF 500V M Y5U 10	NICLA	L10Y5U1D103M	RD-AP0301092W	C122,124	2.00000	60
3038					128920	31-F1103ME0521	C.DIS 0.01UF 500V M Y5U 5T	JETO	L10Y5U4B103M	RD-AP0301092W	C511	1.00000	0
3039					101756	31-F1104K50	C.MON 0.1UF 50V K X7R 5T	BC	K104K20X7RF5TH5	RD-AP0209044J	C631	1.00000	60
3040					112683	31-F722AM50522	C.ELE 2.2UF 50V M 5*115T105C	NCC	KME50VB-2R2M	RD-AP02121116	C600	1.00000	60
3041					128983	31-F7221M25526	C.ELE 220UF 25V M 8*11.5 KY 5T	NCC	KY25VB220M	RD-AP0301051H	C224	1.00000	0
3041-A					132488	31-F7221M25701	C.ELE 220UF 25V M 8*11.5 LZG5T	LTEC	ZGR1EM221F11	RD-AP0211236C		0.00000	0
3041-B					131123	31-F7221M25585	C.ELE 220UF 25V M 8*11.5 YXG5T	RUBCO	25YXG220	RD-AP0301080S		0.00000	0
3041-C					127573	31-F7221M2566	C.ELE 220UF 25V M 8*12 RLS5T	OST	RLS227025M0812	RD-AP0303076F		0.00000	0
4001			*		132576	42-M52512P02	XFMR S5251-2D ERL-35 PC40	LITON	42-M52512P02	RD-AP0206007A	T120	1.00000	0
4002			*		132963	42-M52512P03	XFMR S5251-2D EE-19 PC40	LITON	42-M52512P03	RD-AP0206006A	T501	1.00000	0
4003					132519	37-C5251204	CHOKE EEL-25 7.5MH H5C2	LITON	37-C5251204	RD-AP0211038B	L100	1.00000	0
4004					132520	37-C5251205	CHOKE TR18*10*10 7.5MH(MIN)A07	LITON	37-C5251205	RD-AP0206005A	L101	1.00000	0
4005			*		132399	37-C5251203	PFC CHOKE EE43*35 H10	LITON	37-C5251203	RD-AP0209196B	L102	1.00000	0
4006					131970	37-C5251201	CHOKE S5251-2D T106-52	LITON	37-C5251201	RD-AP0208177B	L200	1.00000	0
4007		*			117572	37-C8081104	CHOKE R4*10 0.43UH+/-20% 10.2	LITON	37-C8081104	RD-AP0301049C	L201,282	2.00000	45
4008		*			116440	37-C6420102	CHOKE R5*25 3.9UH+-20% 11	LITON	37-C6420102	RD-AP9810119B	L210	1.00000	45
4009					132112	37-C5251202	CHOKE MAG AMP W760	LITON	37-C5251202	RD-AP0207062A	L280	1.00000	0
4009-A					135667	37-C5022202	CHOKE MAG AMP AMSM-11S-2	LITON	37-C5022202	RD-AP0302120A		0.00000	0
4010					128200	37-C6251201	CHOKE T68-52D 23UH +-20%	LITON	37-C6251201	RD-AP0106037C	L281	1.00000	0
4012		*			116086	37-C1470103	CHOKE DR6*8.3 3.5UH+-20% 3.0	LITON	37-C1470103	RD-AP9506199B	L501	1.00000	45
4013		*			119280	37-C4022404C	BEAD CORE RH3.5*3.2*1.6C W5	NWE	W5RH3.5*3.2*1.6	RD-AP9812057A	Q120(PIN1),C108-1	2.00000	30
5001					107939	04-J21E01	JUMPER 0.5D BT RUCH	JUNK	04-J21E01	RD-AP0006099F	J6,J7,J13,J16,J17,J24(5mm*6)	0.00054	30
5002					107939	04-J21E01	JUMPER 0.5D BT RUCH	JUNK	04-J21E01	RD-AP0006099F	J5,J15,J22(10mm*3)	0.00027	30
5003					107939	04-J21E01	JUMPER 0.5D BT RUCH	JUNK	04-J21E01	RD-AP0006099F	J14,J18,J19(7.5mm*3)	0.00027	30
5004					133965	04-J21C02	JUMPER 0.8D BT TAPING	SRI	04-J21C02	RD-AP0204160A	J4(7.5mm)	1.00000	0
5005					133965	04-J21C02	JUMPER 0.8D BT TAPING	SRI	04-J21C02	RD-AP0204160A	J2,J3(10mm*2)	2.00000	0
5006					133965	04-J21C02	JUMPER 0.8D BT TAPING	SRI	04-J21C02	RD-AP0204160A	J11,J12(12.5mm)	2.00000	0
5007					133965	04-J21C02	JUMPER 0.8D BT TAPING	SRI	04-J21C02	RD-AP0204160A	J9,J10(15mm)	2.00000	0
5008					133965	04-J21C02	JUMPER 0.8D BT TAPING	SRI	04-J21C02	RD-AP0204160A	J1(17.5mm*1)	1.00000	0
5009					133965	04-J21C02	JUMPER 0.8D BT TAPING	SRI	04-J21C02	RD-AP0204160A	J8,J23(20mm*2)	2.00000	0
5010					107939	04-J21E01	JUMPER 0.5D BT RUCH	JUNK	04-J21E01	RD-AP0006099F	J20(12.5mm)	0.00009	30

LITE-ON ELECTRONICS, INC.
POWER CONVERSION

PARTS LIST

MASS PRODUCTION

MODEL : PS-5251-2DFS_MB
REV : 01
UPDATE : 03/12/2003

DATE : 03/12/2003
PAGE : 6

ITEM	U	F	R	C	PARTNO	OLD PART NO.	DESCRIPTION	MAKER	MAKER PART NO.	FILE NO.	LOCATION	QTY	L/T
5012					107939	04-J21E01	JUMPER 0.5D BT RUCH	JUNK	04-J21E01	RD-AP0006099F	J21(6mm*1)	0.00009	30
5014		*			124511	04-L02BCE600H	WIRE 1430 #24 60 B 5:10	LITON	04-L02BCE600H	RD-AP0301153Y	RT531*2	2.00000	30
5016		*			120224	04-AM5032118	WIRE+H 1430 #18 150 B	LITON	04-AM5032118	RD-AP03020701	SW100-1,SW100-2	2.00000	30
5017		*			102973	04-LM420112	WIRE+T 1015 #18 60 G/Y	LITON	04-LM420112	RD-AP9705125D	INLET(FG)	1.00000	20
5018		*			118378	04-AM4032101	WIRE+H+TUB 1430 #18 100 B	LITON	04-AM4032101	RD-AP0207111I	INLET(L)	1.00000	30
5019		*			118379	04-AM4032102	WIRE+H+TUB 1430 #18 100 W	LITON	04-AM4032102	RD-AP0207111I	INLET(N)	1.00000	30
5022					131924	45-M52512CH1	CNTR+H 20P19C 1007 #18 P1	LITON	45-M52512CH1	RD-AP0207012A	CN1	1.00000	0
5023					135929	45-M52512CR2	CNTR ASSY1007P2-P10S5251-2DS	LITON	45-M52512CR2	RD-AP0303049A	CN2	1.00000	0
6001					132120	46-M52513CS1	CASE-TOP 150*140*86*0.8 SECC	SHM	46-M52513CS1	RD-AP0209035B	CASE-TOP	1.00000	0
6002					131950	46-M52512CS2	CASE-BTM 150*140*86*0.8 SECC	SHM	46-M52512CS2	RD-AP0208079B	CASE-BTM	1.00000	0
6003					131955	52-M52512HS1	HEAT SINK 79*66*2.5 AL	KGM	52-M52512HS1	RD-AP0204139A	HS1	1.00000	0
6004					131956	52-M52512HS2	HEAT SINK 79*66*5 AL	KGM	52-M52512HS2	RD-AP0204138A	HS2	1.00000	0
6005		*			125544	50-AM51111CH5	SCREW+T CH 4*1.5*8 NI	WIEN	50-AM51111CH5	RD-AP0110107D	SW	2.00000	0
6006					134100	50-S25306002	SCREW+T TF 3*0.5*6 NI	WIEN	50-S25300602	RD-AP0210189K	CASE/CASE&PFC ASS'Y	10.00000	0
6007		*			121166	28-M52811GM1	ISL-SHEET 25*20*0.15 MICA	SANCH	28-M52811GM1	RD-AP0006147C	Q120,D280	2.00000	30
6008					134362	28-M52512PL2	ISL-PLT+T 49*52 FRPP	EVERF	28-M52512PL2	RD-AP0206001A	UNDER PFC	1.00000	0
6009		*			121791	28-M62312GM2	ISL-SHEET 12*18*0.15 MICA	SIXPH	28-M62312GM2	RD-AP0006118A	IC230,D220,D201,D200	4.00000	30
6011					114728	50-S2C3008012	SCREW+T PH+2W 3*1.06*8 ZC 2	KUAO	50-S2C3008012	RD-AP0102008F	PCB&CASE-ASS'Y	4.00000	30
6012					134100	50-S25306002	SCREW+T TF 3*0.5*6 NI	WIEN	50-S25300602	RD-AP0210189K	CASE/CASE&PFC ASS'Y	10.00000	0
6013					601208	93-M52512DL4	LBL-SPS 70*55 HPS-5251-2DFS				CASE-TOP	1.00000	0
6014					101490	50-N124301	NUT 3*0.5*2.4 ZC	WIEN	50-N124301	RD-AP0012061C	D220,IC230	2.00000	30
6015		*			124153	50-S2D350701	SCREW+T PH+GW #6-32X7 UNC	WIEN	50-S2D350701	RD-AP9808140F	F.G.	1.00000	30
6016					127672	44-M61516SR1	SPACER SUPPORT 10*3 NY V2	PIN	44-M61516SR1	RD-AP0004121B	PCB(BTM OF HS&NEAR SB)	2.00000	30
6017					102166	50-S2C301001	SCREW+T PH+2W 3*1.06*10 ZC	WIEN	50-S2C301001	RD-AP0102008F	TTC-HOLDER	1.00000	30
6018					134365	44-M52512SR1	SAPCER SUPPORT 11*10*17 NY V2	PIN	44-M52512SR1	RD-AP0209050B	HS1&HS2	1.00000	0
6019					129956	44-M52211BK2	TTC-HOLDER 16*7.5*4 PBT V0	PIN	44-M52211BK2	RD-AP0211227B	RT531	1.00000	0
6020					117965	50-S2C3012012	SCREW+T PH+2W 3*1.06*12 ZN 2	WIEN	50-S2C3012012	RD-AP0102008F	D201,D200,D280	3.00000	30
6021		*			122885	28-M52014WS1	ISL-WASHER 6.15*2.5 PPS 94V0A	EXIM	28-M52014WS1	RD-AP0111108B	IC230,D201,D200,D220	4.00000	30
6022					104341	50-S18301202	SCREW+M CH 3*0.5*12 NI	WIEN	50-S18301202	RD-AP0206141G	Q120	1.00000	30
6023					108239	50-AM420112	NUT+W 3*0.5*3.4 NI	WIEN	50-AM420112	RD-AP9711077B	Q120	1.00000	30
6024					134125	28-M52512PL1	ISL-PLT 23*36*0.25 FRPP	L&D	28-M52512PL1	RD-AP0204188A	CASE-BTM(UNDER CABLE EXIT)	1.00000	0
6025		*			125540	50-AM51111CH1	SCREW+T CH 4.8*1.2*9 NI	WIEN	50-AM51111CH1	RD-AP0110107D	FAN	4.00000	0
6026					115040	50-S283008041	SCREW+T CH 3*1.06*8 ZB	WIEN	50-S283008041	RD-AP0210189K	INLET	2.00000	30
6027					120397	50-S1C301301	SCREW+M PH+2W 3*0.5*13 ZC	WIEN	50-S1C301301	RD-AP0303080H	IC230,D220	2.00000	30
6029		*			117070	93-M42213SL1	LBL-SERL 50.8*12.7 PA-4221-3A	SKYBD	93-M42213SL1	RD-AP9406009A	CASE-TOP	1.00000	20
6030					114434	44-M41411GB1	GND BAND INLET 49*14*20 SPTE	CHIF	44-M41411GB1	RD-AP9809085B	INLET	1.00000	30
6031		*			119794	93-M41519CL3	LBL-CAUT 22*12 PA-4151-9I	SKYBD	93-M41519CL3	RD-AP9903001A	CASE-TOP	1.00000	30
7001		*	*		119847	38-T63A5211	FUSE HSB 250V 6.3A 5*20 215(P)	LITTL	21506.3-PGT	RD-AP0105045E	F100	1.00000	45
7002		*			118239	40-SL14	SW-SLI SPST 250V 12A EV-12	SOTEM	EV-12	RD-AP0106043D	SW100	1.00000	45

LITE-ON ELECTRONICS, INC.
POWER CONVERSION

PARTS LIST

MASS PRODUCTION

MODEL : PS-5251-2DFS MB
REV : 01
UPDATE : 03/12/2003

DATE : 03/12/2003
PAGE : 7

ITEM	U	F	R	C	PARTNO	OLD PART NO.	DESCRIPTION	MAKER	MAKER PART NO.	FILE NO.	LOCATION	QTY	L/T
7003		*			105033	43-M41316PG1	INLET 250V 15A 0707-1	IAW	0707-1-CN	RD-AP9411088C	INLET	1.00000	45
7004			*		134187	61-M38G	FAN 08S 12V 0.24A MW-825H12SII	T&T	MW-825H12SII	RD-AP0301050B	FAN	1.00000	0
7004-A		*	*		118383	61-M38	FAN 08S12V0.25A AD0812HS-A70GL	ADDA	AD0812HS-A70GL	RD-AP0005046G		0.00000	30
7004-B			*		134186	61-M38F	FAN 08S 12V 0.22A KD1208PTS1					0.00000	0
7005					135930	01-M525121ADS	PCB S5251-2DS 145*109*1.62/2A	EP	01-M525121ADS	RD-AP0302116A	PCB	1.00000	0
7007		*			105579	43-CT07W	CABLE TIE 98*2.5 V2 110C	PIN	YJ-98	RD-AP9903086C	INLET(L&N)&FG(1PCS), SW wire & FAN hole & FAN wire(1PCS),O/P wires(3PCS)	5.00000	30
7008					100918	43-CT02W	CABLE TIE 142*2.5 V2 110C	PIN	YJ-142S	RD-AP9903086C	PFC&HS hole(1PCS), O/P wires&CASE(3PCS)	4.00000	20
8001					130039	91-MNC7	IN CTN 366*546*167 5L	EASY	91-MNC7	RD-AP0202116H		0.12500	0
8002					130042	91-MNC10	IN CTN 1156*1126*900 1L	EASY	91-MNC10	RD-AP0202116H		0.00520	0
8003					131338	91-M52018PL2	PA PLT LAY 543*365*167	YUANC	91-M52018PL2	RD-AP0108087A		0.12500	0
8004					136901	53-M52512MN3	MANUAL 297*210 PS-5251-2DFS					0.12500	0
8005					129792	55-MPA1	PALLET 1170*1140*131	LITON	55-MPA1	RD-AP0203073B		0.00416	0
8006		*			118390	93-M40321BC1	LBL-BAR 70*25	TRIM	93-M40321BC1	RD-AP0008134B		0.12500	30
8007					116090	93-M42213BC2	BAR CODE 165*102*0.05	SKYBD	93-M42213BC2	RD-AP0003173E		0.00416	30
8008					136833	07-W251361D	PROTEK WRAPPW32250*360*0.01	DAUBE	PW32	RD-AP0302059A	OUT-CTN	1.00000	0
8009					116538	90-M40321PG1	PE BAG 580*400*550*0.06	HOLIN	90-M40321PG1	RD-AP0210187F	CTN INSIDE	0.12500	30
8010					130696	91-M51611PL1	PA PLT 1140*1120*7	HTP	91-M51611PL1	RD-AP0302132E		0.01666	0
9001		*			101965	04-T14B25030	TUBE-HST 0.25*3.0 125C 600V B	SUMIT	04-T14B25030	RD-AP0112132N	FAN WIRE(50mm*1)	0.05000	20
9002		*			103847	04-T14B25080	TUBE-HST 0.25*8.0 125C 600V B	SUMIT	04-T14B25080	RD-AP0112132N	RV120,RV121,RV123, RV124(20mm*4)	0.08000	30
9003		*			107509	04-T14B20020	TUBE-HST 0.20*2.0 125C 600V B	SUMIT	04-T14B20020	RD-AP0112132N	RT531 WIRE(70mm*2)	0.14000	30
9004		*			100267	04-T14B25050	TUBE-HST 0.25*5.0 125C 600V B	SUMIT	04-T14B25050	RD-AP0112132N	SW100(15mm*2), R124(15mm*1)	0.04500	30
9005		*			103577	04-T14B25070	TUBE-HST 0.25*7.0 125C 600V B	SUMIT	04-T14B25070	RD-AP0112132N	C122(13mm)	0.01300	30
9006		*			103847	04-T14B25080	TUBE-HST 0.25*8.0 125C 600V B	SUMIT	04-T14B25080	RD-AP0112132N	R123(27mm)	0.02700	30
9007		*			116377	04-T14B20010	TUBE-HST 0.20*1.0 125C 600V B	SUMIT	04-T14B20010	RD-AP0112132N	C101 lead(20mm)(17mm)	0.03700	35
9008		*			110303	04-T14B35180	TUBE-HST 0.35*18 125C 600V B	SUMIT	04-T14B35180	RD-AP0112132N	C101 bady(22mm)	0.02200	30
9009		*			103847	04-T14B25080	TUBE-HST 0.25*8.0 125C 600V B	SUMIT	04-T14B25080	RD-AP0112132N	R124(15mm),D284(15mm)	0.03000	30
9010		*			100267	04-T14B25050	TUBE-HST 0.25*5.0 125C 600V B	SUMIT	04-T14B25050	RD-AP0112132N	R510(15mm)	0.01500	30

TOTAL 7 PAGES

REMARK : U (*)-If cUstom parts F (*)-If saFety parts R (*)-cRitical C (*)-If Consign parts ITEM (-numeric)-If subcontract parts ITEM (-character)-If substitution parts

Note : This part list is prepared by Design department for cost estimation.
All of indirect material as solder, flux, glue, thinner, cleaner etc. are not listed on this part list.

LITE-ON ELECTRONICS, INC.
POWER CONVERSION

PARTS LIST

MASS PRODUCTION

MODEL : PS-5251-2DFS S1
REV : 01
UPDATE : 03/12/2003

DATE : 03/12/2003
PAGE : 1

ITEM	U	F	R	C	PARTNO	OLD PART NO.	DESCRIPTION	MAKER	MAKER PART NO.	FILE NO.	LOCATION	QTY	L/T
1001					123237	34-GC181531	TRX NPN 50V 0.15A 2SC1815T092	TOSHB	2SC1815	RD-AP9806042A	Q301	1.00000	75
1001-A					123187	34-GKSC181526	TRX NPN 50V 0.15AKSC1815T092	SAMSU	KSC1815GR	RD-AP9902014B		0.00000	60
1001-B					126570	34-GKTC319849	TRX NPN 50V 0,15AKTC3198GRT092	KEC	KTC3198GR	RD-AP0001034A		0.00000	60
1002					123260	34-GKSR220226	TRX PNP 50V 0,1A 10K/10K	SAMSU	KSR2202	RD-AP9804079B	Q302	1.00000	75
1002-A					125739	34-GRN220231	TRX PNP 50V 0.1A 10K/10K	TOSHB	RN2202	RD-AP9904053A		0.00000	60
1003					123802	33-R1N414818	DIO 75V 0.2A 1N4148 D035	PHLIP	1N4148	RD-AP0204037D	D301,D303	2.00000	60
1003-A					123800	33-R1N414824	DIO 75V 0.2A 1N4148 D035	TEMIC	1N4148	RD-AP0204034B		0.00000	60
1003-B					123799	33-R1N414814	DIO 75V 0.2A 1N4148 D035	ROHM	1N4148	RD-AP0204035B		0.00000	60
1004			*		120889	32-UC3845BN01	IC PWM 8P UC3845BN MOTOR	ON	UC3845BN	RD-AP0106045B	IC300	1.00000	60
1004-A			*		120882	32-UC3845BN	IC PWM 8P UC3845BN STM	STM	UC3845BN	RD-AP0106046D		0.00000	60
1005					123238	34-GA101531	TRX PNP 50V 0.15A 2SA1015 T092	TOSHB	2SA1015	RD-AP9806067A	Q303	1.00000	75
1005-A					123188	34-GKSA101526	TRX PNP 50V 0.15A KSA1015T092	SAMSU	KSA1015GR	RD-AP9902015B		0.00000	60
1005-B					126571	34-GKTA126649	TRX PNP 50V0.15AKTA1266GRT092	KEC	KTA1266GR	RD-AP0110099B		0.00000	60
1006					900351	33-SRLS414814	DIO 75V 0.2A RLS4148 LL34	ROHM	RLS4148	RD-AP9804084B	D305,D302,D304	3.00000	30
1006-A					126869	33-SLL414812	DIO 75V 0.2A LL4148 SOD80C	GS	LL4148	RD-AP9911132A		0.00000	60
1006-B					123797	33-SBAS32L18	DIO 75V 0.2A BAS32L LL34	PHLIP	BAS32L	RD-AP9901025A		0.00000	60
1007					123187	34-GKSC181526	TRX NPN 50V 0.15AKSC1815T092	SAMSU	KSC1815GR	RD-AP9902014B	Q310	1.00000	60
1007-A					123237	34-GC181531	TRX NPN 50V 0.15A 2SC1815T092	TOSHB	2SC1815	RD-AP9806042A		0.00000	75
1007-B					126570	34-GKTC319849	TRX NPN 50V 0.15AKTC3198GRT092	KEC	KTC3198GR	RD-AP0001034A		0.00000	60
2001					105669	30-FA105J8SA	R.CF 1M 1/8W J 3.3	QUMAO	30-FA105J8SA	RD-AP0102080M	R301	1.00000	30
2002		*			122608	30-FC123F8SA4	R.MF 12.40K 1/8W F 3.3	QUMAO	30-FC123F8SA4	RD-AP0102079J	R302	1.00000	30
2003					105675	30-FA103J8SA	R.CF 10K 1/8W J 3.3	QUMAO	30-FA103J8SA	RD-AP0102080M	R304	1.00000	30
2004					127711	30-S331J10SA	R.CF 330 1/10W J 0603	YAGEO	30-S331J10SA	RD-AP0104140H	R305	1.00000	0
2005					105671	30-FA393J8SA	R.CF 39K 1/8W J 3.3	QUMAO	30-FA393J8SA	RD-AP0102080M	R306	1.00000	30
2006					127446	30-S103J10SA	R.CF 10K 1/10W J0603	YAGEO	30-S103J10SA	RD-AP0104140H	R303,R312	2.00000	0
2007					127971	30-S200J10SA	R.CF 20 1/10W J 0603	YAGEO	30-S200J10SA	RD-AP0104140H	R308	1.00000	30
2008					105676	30-FA102J8SA	R.CF 1K 1/8W J 3.3	QUMAO	30-FA102J8SA	RD-AP0102080M	R309	1.00000	30
2009					130116	30-S132J10SA	R.CF 1.3K 1/10W J 0603	YAGEO	30-S132J10SA	RD-AP0104140H	R310	1.00000	0
2010					107307	30-FA302J8SA	R.CF 3K 1/8W J 3.3	QUMAO	30-FA302J8SA	RD-AP0102080M	R307	1.00000	30
2011					127419	30-S102J10SA	R.CF 1K 1/10W J 0603	YAGEO	30-S102J10SA	RD-AP0104140H	R314	1.00000	0
3001					130723	31-F1104J50	C.MON 0.1UF 50V J X7R	BC	K104K20X7RF5TH5	RD-AP0209044J	C301	1.00000	0
3002					112682	31-F747AM50522	C.ELE 4.7UF 50V M 5*11 5T 105C	NCC	KME50VB-4R7M	RD-AP02121116	C307	1.00000	60
3003					130962	31-S1102KA06	C.MON 1000PF 100V K X7R 0603	WALSN			C304	1.00000	0
3004					128129	31-S1223K256	C.MON 0.022UF 25V K X7R 0603	WALSN	31-S1223K256	RD-AP0301126N	C305	1.00000	0
3005					133145	31-S1104K256	C.MON 0.1UF 25V K X7R 0603	WALSN	31-S1104K256	RD-AP0301126N	C302	1.00000	0
3006					120757	31-F1471J50	C.MON 470PF 50V J NPO 5T	BC	K471J15C0GF5RH	RD-AP0209044J	C306	1.00000	45
3007					112887	31-F7100M50522	C.ELE 10UF 50V M 5*11 5T 105C	NCC	KME50VB-10M	RD-AP02121116	C310	1.00000	60
3008					133300	31-S1105Z502	C.MON 1UF 50V Z Y5V 1206	WALSN	31-S1105Z502	RD-AP0301126N	C303	1.00000	0
5001					107939	04-J21E01	JUMPER 0.5D BT RUCH	JUNK	04-J21E01	RD-AP0006099F	J304(5mm)	0.00009	30

LITE-ON ELECTRONICS, INC.
POWER CONVERSION

PARTS LIST

MASS PRODUCTION

MODEL : PS-5251-2DFS S1
REV : 01
UPDATE : 03/12/2003

DATE : 03/12/2003
PAGE : 2

ITEM	U	F	R	C	PARTNO	OLD PART NO.	DESCRIPTION	MAKER	MAKER PART NO.	FILE NO.	LOCATION	QTY	L/T
5002					107939	04-J21E01	JUMPER 0.5D BT RUCH	JUNK	04-J21E01	RD-AP0006099F	J302,J303,D306(7.5mm)	0.00027	30
7001					136229	01-M502222AD	PCB S5022-2D-1 29*40*1.61/0A	EP	01-M502222AD	RD-AP0302117A	PCB	1.00000	0
7002					112024	45-M32311WP3	BREAKAWAY PHSR 8P 2.54 BG	LITON	45-M32311WP3	RD-AP0202045N	S1	1.00000	30

TOTAL 2 PAGES

REMARK : U (*)-If cUstom parts F (*)-If saFety parts R (*)-cRitical C (*)-If Consign parts ITEM (-numeric)-If subcontract parts ITEM (-character)-If substitution parts

Note : This part list is prepared by Design department for cost estimation.

All of indirect material as solder, flux, glue, thinner, cleaner etc. are not listed on this part list.

LITE-ON ELECTRONICS, INC.
POWER CONVERSION

PARTS LIST

MASS PRODUCTION

MODEL : PS-5251-2DFS S2
REV : 01
UPDATE : 03/12/2003

DATE : 03/12/2003

ITEM	U	F	R	C	PARTNO	OLD PART NO.	DESCRIPTION	MAKER	MAKER PART NO.	FILE NO.	LOCATION	QTY	L/T
1002			*		126569	32-TSM111CN	IC PG 20P TSM111CN STM	STM	TSM111CN	RD-AP0212108B	IC400	1.00000	60
1003			*		116337	32-KA431AZ	IC REF 3P 2.495V KA431AZ(+-1%)	FAIRC	KZ431AZ	RD-AP0302112E	IC511	1.00000	60
1003-A			*		122671	32-TL431ACLP11	IC REF 3P TL431ACLP(+-1%)MOTOR	ON	TL431ACLP	RD-AP0104022D		0.00000	75
1003-B			*		126574	32-KIA431A49	IC REF 3P 2.495V KIA431A1%T092	KEC	KIA431A	RD-AP9910101A		0.00000	60
1003-C			*		122678	32-TL431ACLP01	IC REF 3P TL431ACLP (+-1%) TI	TI	TL431ACLP	RD-AP9802072A		0.00000	75
1004					114700	34-GKSA916Y26	TRX PNP 120V 0.8A KSA916YT092L	FAIRC	KSA916Y	RD-AP0112083B	Q251	1.00000	60
1004-A					100547	34-G2SA965	TRX PNP 120V0.8A 2SA965Y T092M	TOSHB	2SA965Y	RD-AP9605179C		0.00000	60
1004-B					128565	34-SKTA1023Y49	TRX PNP120V0.8A KTA1023YT092L	KEC	KTA1023	RD-AP0104119A		0.00000	0
1005					123602	33-ERD12EB316	Z.D 1/2W 11.80-12.30V RD12EB3	NEC	RD12EB3	RD-AP0101058G	ZD400	1.00000	60
1005-A					116527	33-EHZ12A215	Z.D 1/2W 11.9-12.4V HZ12A2	HITAH	HZ12A2	RD-AP0301105Q		0.00000	60
1005-B					131258	33-ETZX12C24	Z.D 1/2W 11.9-12.4V TZX12C	VISHY	TZX12C	RD-AP0108174A		0.00000	0
1006					123190	34-SKST2907A26	TRX PNP 60V0.6AKST2907ASOT23	SAMSU	KST2907A	RD-AP9812024A	Q580	1.00000	60
1006-A					123240	34-SMMBT290711	TRXPNP60V0.6AMMBT2907ALT1	MOTOR	MMBT2907ALT1	RD-AP9804026A		0.00000	75
1006-B					128568	34-SKTN2907A49	TRX PNP60V0.6A KTN2907AS SOT23	KEC	KTN2907AS	RD-AP0010074A		0.00000	0
1006-C					132780	34-SMMBT290747	TRX PNP 60V 0.6AMMBT2907ASOT23	DII	MMBT2907A	RD-AP0207045A		0.00000	0
1007					100756	33-R1N400213	DIO 100V 1A 1N4002 DO41	LITON	1N4002	RD-AP9812067D	D531	1.00000	60
1007-A					125904	33-R1N400247	DIO 100V 1A 1N4002 DO41	DII	IN4002	RD-AP0007008C		0.00000	45
1007-B					123443	33-R1N400211	DIO 100V 1A 1N4002 DO41	MOTOR	1N4002	RD-AP9804074A		0.00000	60
1012			*		114700	34-GKSA916Y26	TRX PNP 120V 0.8A KSA916YT092L	FAIRC	KSA916Y	RD-AP0112083B	Q531	1.00000	60
1012-A			*		100547	34-G2SA965	TRX PNP 120V0.8A 2SA965Y T092M	TOSHB	2SA965Y	RD-AP9605179C		0.00000	60
1012-B			*		128565	34-SKTA1023Y49	TRX PNP120V0.8A KTA1023YT092L	KEC	KTA1023	RD-AP0104119A		0.00000	0
1017					123596	33-ERD11EB316	Z.D 1/2W 10.82-11.26V RD11EB3	NEC	RD11EB3	RD-AP0101058G	ZD531	1.00000	60
1017-A					131254	33-ETZX11C24	Z.D 1/2W 10.9-11.3V TZX11C	VISHY	TZX11C	RD-AP0108174A		0.00000	0
1017-B					123597	33-EHZ11C115	Z.D 1/2W 10.90-11.30V HZ11C1	HITAH	HZ11C1	RD-AP0301105Q		0.00000	60
2001					127419	30-S102J10SA	R.CF 1K 1/10W J 0603	YAGEO	30-S102J10SA	RD-AP0104140H	R311	1.00000	0
2002					127422	30-S111J10SA	R.CF 110 1/10W J 0603	YAGEO	30-S111J10SA	RD-AP0104140H	R313	1.00000	0
2003					127432	30-S105J10SA	R.CF 1M 1/10W J 0603	YAGEO	30-S105J10SA	RD-AP0104140H	R314	1.00000	0
2004					127420	30-S333J10SA	R.CF 33K 1/10W J 0603	YAGEO	30-S333J10SA	RD-AP0104140H	R401	1.00000	0
2005					127435	30-S751J10SA	R.CF 750 1/10W J 0603	YAGEO	30-S751J10SA	RD-AP0104140H	R580	1.00000	0
2006					128152	30-S561J10SA	R.CF 560 1/10W J 0603	YAGEO	30-S561J10SA	RD-AP0104140H	R581	1.00000	0
2007					127643	30-S203J10SA	R.CF 20K 1/10W J 0603	YAGEO	30-S203J10SA	RD-AP0104140H	R333	1.00000	30
2008					119872	30-FC521F8SA3	R.MF 523 1/8W F 3.3	QUMAO	30-FC521F8SA3	RD-AP0102079J	R410	1.00000	30
2010					127689	30-SA50108	R.VR 500 0.1W M SIDE	TAIVO	TB069E-OD-501	RD-AP0009122B	VR401	1.00000	30
2011					127426	30-S101J10SA	R.CF 100 1/10W J 0603	YAGEO	30-S101J10SA	RD-AP0104140H	R330	1.00000	0
2012					128453	30-S861F10SA6	R.MF 866 1/10W F 0603	YAGEO	30-S861F10SA6	RD-AP0104140H	R332	1.00000	0
2014					127647	30-S242F10SA9	R.MF 2.49K 1/10W F 0603	YAGEO	30-S242F10SA9	RD-AP0104140H	R334	1.00000	30
2015					127617	30-S201J10SA	R.CF 200 1/10W J 0603	YAGEO	30-S201J10SA	RD-AP0104140H	R400,R338	2.00000	30
2016					127436	30-S000J10SA	R.CF 0 1/10W J 0603	YAGEO	30-S000J10SA	RD-AP0104140H	R310,R335	2.00000	0
2017					116743	30-S622J4SA	R.CF 6.2K 1/4W J 1206	YAGEO	30-S622J4SA	RD-AP0104140H	R402,R339	2.00000	30

LITE-ON ELECTRONICS, INC.
POWER CONVERSION

PARTS LIST

MASS PRODUCTION

MODEL : PS-5251-2DFS_S2
REV : 01
UPDATE : 03/12/2003

DATE : 03/12/2003

ITEM	U	F	R	C	PARTNO	OLD PART NO.	DESCRIPTION	MAKER	MAKER PART NO.	FILE NO.	LOCATION	QTY	L/T
2021					125154	30-FA621J4M55S	R.CF 620 1/4W(S) J	QUMAO	30-FA621J4M55S	RD-AP0102080M	R412	1.00000	30
2026					127424	30-S103F10SA	R.MF 10K 1/10W F 0603	YAGEO	30-S103F10SA	RD-AP0104140H	R340	1.00000	0
2027					128900	30-SA20403	R.VR 200K 0.1W M SIDE	TAIVO	TB069E-0D-204	RD-AP0009122B	VR301	1.00000	0
2028					115826	30-FG100J2M63S	R.MO 10 1/2W(S) J M63	QUMAO	30-FG100J2M63S	RD-AP0106023Q	R251	1.00000	30
2029					105676	30-FA102J8SA	R.CF 1K 1/8W J 3.3	QUMAO	30-FA102J8SA	RD-AP0102080M	R252,R416	2.00000	30
2030					127612	30-S221J10SA	R.CF 220 1/10W J 0603	YAGEO	30-S221J10SA	RD-AP0104140H	R250	1.00000	30
2032					131296	30-S512D10SA1	R.MF 5.11K 1/10W D 0603	YAGEO	30-S512D10SA1	RD-AP0104140H	R640	1.00000	0
2035					127433	30-S104J10SA	R.CF 100K 1/10W J 0603	YAGEO	30-S104J10SA	RD-AP0104140H	R415,R413	2.00000	0
2036					130531	30-S753D10SA	R.MF 75K 1/10W D 0603	YAGEO	30-S753D10SA	RD-AP0104140H	R411	1.00000	0
2039					128529	30-S201F10SA	R.MF 200 1/10W F 0603	YAGEO	30-S201F10SA	RD-AP0104140H	R531	1.00000	0
2040					127421	30-S393J10SA	R.CF 39K 1/10W J 0603	YAGEO	30-S393J10SA	RD-AP0104140H	R312	1.00000	0
2044					127668	30-S100J10SA	R.CF 10 1/10W J 0603	YAGEO	30-S100J10SA	RD-AP0104140H	R331	1.00000	0
2045					127668	30-S100J10SA	R.CF 10 1/10W J 0603	YAGEO	30-S100J10SA	RD-AP0104140H	R315	1.00000	0
2049					127437	30-S682J10SA	R.CF 6.8K 1/10W J 0603	YAGEO	30-S682J10SA	RD-AP0104140H	R417	1.00000	0
3004					133145	31-S1104K256	C.MON 0.1UF 25V K X7R 0603	WALSN	31-S1104K256	RD-AP0301126N	C332,311,416,417,418,419, 312,403,404,509,510,313,340	13.00000	0
3006					136110	31-F768AM50	C.ELE 6.8UF 50V M 5*11 5T 105C	TACON	UVT1H6R8ML	RD-AP02121116	C400	1.00000	0
3007					118314	31-F722AM50528	C.ELE 2.2UF 50V M 5*11 5T KMF	NCC	KMF50VB-22AM	RD-AP02112080	C401	1.00000	60
3007-A					112683	31-F722AM50522	C.ELE 2.2UF 50V M 5*115T105C	NCC	KME50VB-2R2M	RD-AP02121116		0.00000	60
3008					112685	31-F7470M25522	C.ELE 47UF 25V M 5*11 5T 105C	NCC	KME25VB-47M	RD-AP02121116	C580	1.00000	60
3010					132470	31-F7220M5070	C.ELE 22UF 50V M 5*11 LZG 5T	LTEC	ZGR1HM220D11	RD-AP0211236C	C531	1.00000	0
3010-A					120832	31-F7220M50581	C.ELE 22UF 50V M 5*11 YXF 5T	RUBCO	50YXF22M	RD-AP0210148S		0.00000	45
3010-B					129285	31-F7220M5066	C.ELE 22UF 50V M 5*11 RLS5T	OST	RLS226050M0511	RD-AP0303076F		0.00000	0
3011					127922	31-S1102K506	C.MON 1000PF 50V K X7R 0603	WALSN	31-S1102K506	RD-AP0301126N	C402,310	2.00000	30
3013					129767	31-S1474K161	C.MON 0.47UF 16V K X7R 0805	WALSN	31-S1474K161	RD-AP0301126N	C330	1.00000	0
3014					127793	31-S1101J506	C.MON 100PF 50V J NPO 0603	WALSN	31-S1101J506	RD-AP0301126N	C331	1.00000	30
3015					133145	31-S1104K256	C.MON 0.1UF 25V K X7R 0603	WALSN	31-S1104K256	RD-AP0301126N	C511	1.00000	0
5001					127436	30-S000J10SA	R.CF 0 1/10W J 0603	YAGEO	30-S000J10SA	RD-AP0104140H	JP8,JP15,JP18,JP17,JP21,JP6, JP23,JP24,JP10	9.00000	0
5002					113769	30-S000J4SA	R.CF 0 1/4W J 1206	YAGEO	30-S000J4SA	RD-AP0104140H	JP9,JP12,JP13,JP25	4.00000	30
5004					107939	04-J21E01	JUMPER 0.5D BT RUCH	JUNK	04-J21E01	RD-AP0006099F	JP11(6mm)	0.00009	30
5005					107939	04-J21E01	JUMPER 0.5D BT RUCH	JUNK	04-J21E01	RD-AP0006099F	JP1,JP3,JP4,JP20(7.5mm)	0.00036	30

LITE-ON ELECTRONICS, INC.
POWER CONVERSION

PARTS LIST

MASS PRODUCTION

MODEL : PS-5251-2DFS_S2
REV : 01
UPDATE : 03/12/2003

DATE : 03/12/2003
PAGE : 3

ITEM	U	F	R	C	PARTNO	OLD PART NO.	DESCRIPTION	MAKER	MAKER PART NO.	FILE NO.	LOCATION	QTY	L/T
5006					107939	04-J21E01	JUMPER 0.5D BT RUCH	JUNK	04-J21E01	RD-AP0006099F	JP2(10mm)	0.00009	30
6001					123996	44-M52017MP1	MECHANICAL PIN 11*6*0.8 SPTE	SHM	44-M52017MP1	RD-AP9808114B		1.00000	30
6002					120342	44-M150019SR1	SPACER SUPPORT 3*3 NY V2	PIN	44-M150019SR1	RD-AP0302128B		1.00000	30
7001					135235	01-M502223AD	PCB S5022-2D-2 61*40*1.61/0A	EP	01-M502223AD	RD-AP0302115A	PCB	1.00000	0
7002					132563	45-M52512WP1	BREAKAWAY PHSR 18P 2.54 BG	LITON	45-M52512WP1	RD-AP0202045N	S2	1.00000	0

TOTAL 3 PAGES

REMARK : U (*)-If cUstom parts F (*)-If saFety parts R (*)-cRitical C (*)-If Consign parts ITEM (-numeric)-If subcontract parts ITEM (-character)-If substitution parts

Note : This part list is prepared by Design department for cost estimation.

All of indirect material as solder, flux, glue, thinner, cleaner etc. are not listed on this part list.

LITE-ON ELECTRONICS, INC.
POWER CONVERSION

Design Critical Parts List

PILOT RUN (DESIGN FROZEN)

MODEL : PS-5251-2DFS_MB
UPDATE : 2003/2/7
REV : 0G

DATE : 2003/2/12

ITEM	U	F	R	C	PARTNO	OLD PART NO.	DESCRIPTION	MAKER	MAKER PART NO.	FILE NO.	LOCATION	QTY
1002			*		132964	32-TNY267P	IC PWM SW 8P TNY267P	PI	TNY267P	RD-AP0202128A	IC501	1.00000
1003			*		130366	33-RMBR3045C12	DIO 45V 30A MBR3045CT TO220	GS	MBR3045CT	RD-AP0112025A	D200,D201	2.00000
1003-A			*		130379	33-RSTPS304T19	DIO 45V 30A STPS3045CT TO220AB	STM	STPS3045CT	RD-AP0106100A		0.00000
1003-B			*		136491	33-RMBR3045C13	DIO 45V 30A MBR3045CT TO220					0.00000
1004		*	*		115571	LTV-817B	IC PHO 4P LTV-817B 160-260	LITON	LTV817-PRB	RD-AP9905007I	PC501,PC502,PC301,PC401	4.00000
1004-A			*		116910	32-PS25611VW	IC PHO 4P PS2561-1-V 130-260	NEC	PS2561-1-VW	RD-AP9910031D		0.00000
1005			*		120509	34-F2SK2611	MFET N 900V 9A 1.4 2SK2611	TOSHB	2SK2611	RD-AP9706153A	Q120	1.00000
1005-A			*		133260	34-FFQA9N9026	MFET N 900V 8.6A 1.3 FQA9N90	FAIRC	FQA9N90	RD-AP0204026A		0.00000
1005-B			*		133259	34-F2SK208242	MFET N 900V 9A 1.4 2SK2082-01	FUJI	2SK2082-01	RD-AP0208050A		0.00000
1006			*		123563	33-RMBR304512	DIO 45V 30A MBR3045PT TO3P	GS	MBR3045PT	RD-AP9811069A	D280	1.00000
1006-A			*		123562	33-RMBR304513	DIO 45V 30A MBR3045PT TO3P	LITON	MBR3045PT	RD-AP9812049A		0.00000
1006-B			*		123564	33-RSTPS304519	DIO 45V 30A STPS3045CW TO247	STM	STPS3045CW	RD-AP9901059A		0.00000
1008			*		128926	33-BGBU80813	BRG 800V 8A GBU808 LITON	LITON	GBU808	RD-AP0011100A	D100	1.00000
1008-A			*		110046	33-BGBU8K	BRG 800V 8A GBU8K GI	GI	GBU8K	RD-AP9109129		0.00000
1008-B			*		133050	33-BD8KBA80R52	BRG 800V 8A D8KBA80R	SHGEN	D8KBA80R	RD-AP0207039A		0.00000
1013			*		129077	33-RMBR2010013	DIO 100V 20A MBR20100CT TO220	LITON	MBR20100CT	RD-AP0104092A	D220	1.00000
1013-A			*		125296	33-RSTPS20H19	DIO 100V 20A STPS20H100CTTO220	STM	STPS20H100CT	RD-AP0004011A		0.00000
1013-B			*		130469	33-RMBR20H1G12	DIO 100V20AMBR20H100CTGTO220AB	GS	MBR20H100CTG	RD-AP0106078A		0.00000
1017			*		134670	34-GKSP4226	TRX NPN 300V 0.5A KSP42 TO92				Q121	1.00000
1017-A			*		133616	34-GMPSA4249	TRX NPN 300V 0.5A MPSA42 TO92	KEC	MPSA42	RD-AP0207043A		0.00000
1017-B			*		134746	34-GMPSA4211	TRX NPN 300V 0.5A MPSA42 TO92	ON	MPSA42	RD-AP0207040A		0.00000
1018			*		133617	34-GMPSA9249	TRX PNP 300V 0.5A MPSA92 TO92	KEC	MPSA92	RD-AP0207042A	Q122	1.00000
1018-A			*		134652	34-GMPSA9218	TRX PNP 300V 0.5A MPSA92 TO92	PHLIP	MPSA92	RD-AP0207044A		0.00000
1018-B			*		134747	34-GMPSA9211	TRX PNP 300V 0.5A MPSA92 TO92	ON	MPSA92	RD-AP0207041A		0.00000
1021			*		123249	33-RSB36012	DIO 60V 3A SB360 DO201AD GS	GS	SB360	RD-AP9902023B	D505	1.00000
1021-A			*		123248	33-RSB36013	DIO 60V 3A SB360 DO201AD LITON	LITON	SB360	RD-AP9902021C		0.00000
1021-B			*		125905	33-RSB36047	DIO 60V 3A SB360 DO201AD	DII	SB360	RD-AP0007100B		0.00000
1025		*	*		120514	33-EV150LA5	ABSORBER 150V 2500A V150LA5	HARIS	V150LA5	RD-AP0207093E	RV120,RV121,RV123,RV124	4.00000
1025-A			*		125699	33-EV10K150	ABSORBER 150V 2500A V10K150	UEI	V10K150	RD-AP9910019A		0.00000
1025-B		*	*		108329	33-EZ151-04UL	ABSORBER 150V 2000A Z151-04UL	MAIDA	Z151-04UL	RD-AP0203123P		0.00000
1026			*		120874	33-RBYV-26E	DIO 1000V 1A BYV-26E	PHLIP	BYV-26E	RD-AP9706110B	D120	1.00000
1026-A			*		122842	33-RBYV-26E2	DIO 1000V 1A BYV-26E GI	VGS	BYV26E	RD-AP0207123B		0.00000
1026-B			*		128411	33-RBYV-26E12	DIO 1000V 1A BYV-26EGP GS	GS	BYV-26EGP	RD-AP0007012A		0.00000
1026-C			*		117087	33-RMUR1100E	DIO 1100V 1A MUR1100E DO15	MOTOR	MUR1100E	RD-AP9405184A		0.00000
1027			*		120770	32-L7912ACV	IC REG-12V 1.5A 7912ACV TO220	STM	L7912ACV	RD-AP0007026B	IC230	1.00000
1027-A			*		123507	32-LM7912CT22	IC REG3P-12V1.5A LM7912CTTO220	NS	LM7912CT	RD-AP0006155B		0.00000
1031			*		120747	33-RUG2D	DIO 200V 2A UG2D DO15	GI	UG2D	RD-AP9612080A	D231	1.00000
1031-A			*		121976	33-RSF20DG	DIO 200V 2A SF20DG DO15	LITON	SF20DG	RD-AP9710034A		0.00000
1031-B			*		128389	33-RSF20DG47	DIO 200V 2A SF20DG DO15	DII	SF20DG	RD-AP0009003C		0.00000

LITE-ON ELECTRONICS, INC.
POWER CONVERSION

Design Critical Parts List

PILOT RUN (DESIGN FROZEN)

MODEL : PS-5251-2DFS_MB
UPDATE : 2003/2/7
REV : 0G

DATE : 2003/2/12

ITEM	U	F	R	C	PARTNO	OLD PART NO.	DESCRIPTION	MAKER	MAKER PART NO.	FILE NO.	LOCATION	QTY
1035			*		116337	32-KA431AZ	IC REF 3P 2.495V KA431AZ(+-1%)	SAMSU	KA431AZ	RD-AP9904030D	IC600	1.00000
1035-A			*		126574	32-KIA431A49	IC REF 3P 2.495V KIA431A1%TO92	KEC	KIA431A	RD-AP9910101A		0.00000
1035-B			*		122671	32-TL431ACLP11	IC REF 3P TL431ACLP(+-1%)MOTOR	ON	TL431ACLP	RD-AP0104022D		0.00000
1035-C			*		122678	32-TL431ACLP01	IC REF 3P TL431ACLP (+-1%) TI	TI	TL431ACLP	RD-AP9802072A		0.00000
3004			*		136890	31-F7681VB066	C.ELE 680UF 200V V 22*45 SPS				C120,C121	2.00000
3004-A			*		110107	31-F7681VB052	C.ELE 680UF 200V V 22*45 SMH	NCC	SMH200VSSN680V	RD-AP0205010Q		0.00000
3004-B			*		109428	31-F7681VB056	C.ELE 680UF 200V V 22*45 TS UP	MATSU	ECEC2DP681GY	RD-AP0206012I		0.00000
4001			*		132576	42-M52512P02	XFMR S5251-2D ERL-35 PC40	LITON	42-M52512P02	RD-AP0206007A	T120	1.00000
4002			*		132963	42-M52512P03	XFMR S5251-2D EE-19 PC40	LITON	42-M52512P03	RD-AP0206006A	T501	1.00000
4005			*		132399	37-C5251203	PFC CHOKE EE43*35 H10	LITON	37-C5251203	RD-AP0209196B	L102	1.00000
7001		*	*		119847	38-T63A5211	FUSE HSB 250V 6.3A 5*20 215(P)	LITTL	21506.3-PGT	RD-AP0105045E	F100	1.00000
7004			*		134187	61-M38G	FAN 08S 12V 0.24A MW-825H12SII	T&T	MW-825H12SII	RD-AP0301050B	FAN	1.00000
7004-A		*	*		118383	61-M38	FAN 08S12V0.25A AD0812HS-A70GL	ADDA	AD0812HS-A70GL	RD-AP0005046G		0.00000
7004-B			*		134186	61-M38F	FAN 08S 12V 0.22A KD1208PTS1					0.00000

TOTAL 2 PAGES

REMARK : U (*)-If cUstom parts F (*)-If saFety parts R (*)-cRitical C (*)-If Consign parts ITEM (-numeric)-If subcontract parts ITEM (-character)-If substitution parts

Note : This part list is prepared by Design department for cost estimation.
All of indirect material as solder, flux, glue, thinner, cleaner etc. are not listed on this part list.

Design : _____ 2/13 03

PUR : _____

LITE-ON ELECTRONICS, INC.
POWER CONVERSION

Design Critical Parts List

PILOT RUN (DESIGN FROZEN)

MODEL : PS-5251-2DFS_S1
UPDATE : 2003/2/7
REV : 0G

DATE : 2003/2/12
PAGE : 1

ITEM	U	F	R	C	PARTNO	OLD PART NO.	DESCRIPTION	MAKER	MAKER PART NO.	FILE NO.	LOCATION	QTY
1004			*		120889	32-UC3845BN01	IC PWM 8P UC3845BN MOTOR	ON	UC3845BN	RD-AP0106045B	IC300	1.00000
1004-A			*		120882	32-UC3845BN	IC PWM 8P UC3845BN STM	STM	UC3845BN	RD-AP0106046D		0.00000

TOTAL 1 PAGES

REMARK : U (*)-If cUstom parts F (*)-If saFety parts R (*)-cRitical C (*)-If Consign parts ITEM (-numeric)-If subcontract parts ITEM (-character)-If substitution parts

Note : This part list is prepared by Design department for cost estimation.
All of indirect material as solder, flux, glue, thinner, cleaner etc. are not listed on this part list.

Design : _____ 2/13 03

PUR : _____

LITE-ON ELECTRONICS, INC.
POWER CONVERSION

Design Critical Parts List

PILOT RUN (DESIGN FROZEN)

MODEL : PS-5251-2DFS_S2
UPDATE : 2003/2/7
REV : 0G

DATE : 2003/2/12
PAGE : 1

ITEM	U	F	R	C	PARTNO	OLD PART NO.	DESCRIPTION	MAKER	MAKER PART NO.	FILE NO.	LOCATION	QTY
1002			*		126569	32-TSM111CN	IC PG 20P TSM111CN STM	STM	TSM111CN	RD-AP0212108B	IC400	1.00000
1003			*		116337	32-KA431AZ	IC REF 3P 2.495V KA431AZ(+-1%)	SAMSU	KA431AZ	RD-AP9904030D	IC511	1.00000
1003-A			*		122671	32-TL431ACLP11	IC REF 3P TL431ACLP(+-1%)MOTOR	ON	TL431ACLP	RD-AP0104022D		0.00000
1003-B			*		126574	32-KIA431A49	IC REF 3P 2.495V KIA431A1%TO92	KEC	KIA431A	RD-AP9910101A		0.00000
1003-C			*		122678	32-TL431ACLP01	IC REF 3P TL431ACLP (+-1%) TI	TI	TL431ACLP	RD-AP9802072A		0.00000
1012			*		114700	34-GKSA916Y26	TRX PNP 120V 0.8A KSA916YTO92L	FAIRC	KSA916Y	RD-AP0112083B	Q531	1.00000
1012-A			*		100547	34-G2SA965	TRX PNP 120V0.8A 2SA965Y TO92M	TOSHB	2SA965Y	RD-AP9605179C		0.00000
1012-B			*		128565	34-SKTA1023Y49	TRX PNP120V0.8A KTA1023YTO92L	KEC	KTA1023	RD-AP0104119A		0.00000

TOTAL 1 PAGES

REMARK : U (*)-If cUstom parts F (*)-If saFety parts R (*)-cRitical C (*)-If Consign parts ITEM (-numeric)-If subcontract parts ITEM (-character)-If substitution parts

Note : This part list is prepared by Design department for cost estimation.
All of indirect material as solder, flux, glue, thinner, cleaner etc. are not listed on this part list.

Design : _____ 2/13 03

PUR : _____

LITE-ON ELECTRONICS, INC.
POWER CONVERSION

Design Critical Parts List

MODEL : PS-5251-2DFS_MB
UPDATE : 2003/2/7
REV : 0G

DATE : 2003/2/12

ITEM	PARTNO	OLDPARTNO	DESCRIPTION	LOCATION	MAKER1	MAKERPN1	MAKER2	MAKERPN2	MAKER3	MAKERPN3
*1002	132964	32-TNY267P	IC PWM SW 8P TNY267P	IC501	PI	TNY267P	----	----	----	----
1003	130366	33-RMBR3045C12	DIO 45V 30A MBR3045CT TO220	D200,D201	GS	MBR3045CT	----	----	----	----
1003-A	130379	33-RSTPS304T19	DIO 45V 30A STPS3045CT TO220AB		STM	STPS3045CT	----	----	----	----
1003-B	136491	33-RMBR3045C13	DIO 45V 30A MBR3045CT TO220		----	----	----	----	----	----
1004	115571	LTV-817B	IC PHO 4P LTV-817B 160-260	PC501,PC502,PC301, PC401	LITON	LTV817-PRB	----	----	----	----
1004-A	116910	32-PS25611VW	IC PHO 4P PS2561-1-V 130-260		NEC	PS2561-1-VW	----	----	----	----
1005	120509	34-F2SK2611	MFET N 900V 9A 1.4 2SK2611	Q120	TOSHB	2SK2611	----	----	----	----
1005-A	133260	34-FFQA9N9026	MFET N 900V 8.6A 1.3 FQA9N90		FAIRC	FQA9N90	----	----	----	----
1005-B	133259	34-F2SK208242	MFET N 900V 9A 1.4 2SK2082-01		FUJI	2SK2082-01	----	----	----	----
1006	123563	33-RMBR304512	DIO 45V 30A MBR3045PT TO3P	D280	GS	MBR3045PT	----	----	----	----
1006-A	123562	33-RMBR304513	DIO 45V 30A MBR3045PT TO3P		LITON	MBR3045PT	----	----	----	----
1006-B	123564	33-RSTPS304519	DIO 45V 30A STPS3045CW TO247		STM	STPS3045CW	----	----	----	----
1008	128926	33-BGBU80813	BRG 800V 8A GBU808 LITON	D100	LITON	GBU808	----	----	----	----
1008-A	110046	33-BGBU8K	BRG 800V 8A GBU8K GI		GI	GBU8K	----	----	----	----
1008-B	133050	33-BD8KBA80R52	BRG 800V 8A D8KBA80R		SHGEN	D8KBA80R	----	----	----	----
1013	129077	33-RMBR2010013	DIO 100V 20A MBR20100CT TO220	D220	LITON	MBR20100CT	----	----	----	----
1013-A	125296	33-RSTPS20H19	DIO 100V 20A STPS20H100CTTO220		STM	STPS20H100CT	----	----	----	----
1013-B	130469	33-RMBR20H1G12	DIO 100V20AMBR20H100CTGTO220AB		GS	MBR20H100CTG	----	----	----	----
1017	134670	34-GKSP4226	TRX NPN 300V 0.5A KSP42 TO92	Q121	----	----	----	----	----	----
1017-A	133616	34-GMPSA4249	TRX NPN 300V 0.5A MPSA42 TO92		KEC	MPSA42	----	----	----	----
1017-B	134746	34-GMPSA4211	TRX NPN 300V 0.5A MPSA42 TO92		ON	MPSA42	----	----	----	----
1018	133617	34-GMPSA9249	TRX PNP 300V 0.5A MPSA92 TO92	Q122	KEC	MPSA92	----	----	----	----
1018-A	134652	34-GMPSA9218	TRX PNP 300V 0.5A MPSA92 TO92		PHLIP	MPSA92	----	----	----	----
1018-B	134747	34-GMPSA9211	TRX PNP 300V 0.5A MPSA92 TO92		ON	MPSA92	----	----	----	----
1021	123249	33-RSB36012	DIO 60V 3A SB360 DO201AD GS	D505	GS	SB360	----	----	----	----
1021-A	123248	33-RSB36013	DIO 60V 3A SB360 DO201AD LITON		LITON	SB360	----	----	----	----
1021-B	125905	33-RSB36047	DIO 60V 3A SB360 DO201AD		DII	SB360	----	----	----	----
1025	120514	33-EV150LA5	ABSORBER 150V 2500A V150LA5	RV120,RV121,RV123, RV124	HARIS	V150LA5	----	----	----	----
1025-A	125699	33-EV10K150	ABSORBER 150V 2500A V10K150		UEI	V10K150	----	----	----	----
1025-B	108329	33-EZ151-04UL	ABSORBER 150V 2000A Z151-04UL		MAIDA	Z151-04UL	----	----	----	----
1026	120874	33-RBYV-26E	DIO 1000V 1A BYV-26E	D120	PHLIP	BYV-26E	----	----	----	----
1026-A	122842	33-RBYV-26E2	DIO 1000V 1A BYV-26E GI		VGS	BYV26E	----	----	----	----
1026-B	128411	33-RBYV-26E12	DIO 1000V 1A BYV-26EGP GS		GS	BYV-26EGP	----	----	----	----
1026-C	117087	33-RMUR1100E	DIO 1100V 1A MUR1100E DO15		MOTOR	MUR1100E	----	----	----	----
1027	120770	32-L7912ACV	IC REG-12V 1.5A 7912ACV TO220	IC230	STM	L7912ACV	----	----	----	----
1027-A	123507	32-LM7912CT22	IC REG3P-12V1.5A LM7912CTTO220		NS	LM7912CT	----	----	----	----
1031	120747	33-RUG2D	DIO 200V 2A UG2D DO15	D231	GI	UG2D	----	----	----	----

LITE-ON ELECTRONICS, INC.
POWER CONVERSION

VENDOR LIST

Design Critical Parts List

MODEL : PS-5251-2DFS_MB
UPDATE : 2003/2/7
REV : 0G

DATE : 2003/2/12

ITEM	PARTNO	OLDPARTNO	DESCRIPTION	LOCATION	MAKER1	MAKERPN1	MAKER2	MAKERPN2	MAKER3	MAKERPN3
1031-A	121976	33-RSF20DG	DIO 200V 2A SF20DG DO15		LITON	SF20DG	----	----	----	----
1031-B	128389	33-RSF20DG47	DIO 200V 2A SF20DG DO15		DII	SF20DG	----	----	----	----
1035	116337	32-KA431AZ	IC REF 3P 2.495V KA431AZ(+-1%)	IC600	SAMSU	KA431AZ	----	----	----	----
1035-A	126574	32-KIA431A49	IC REF 3P 2.495V KIA431A1%TO92		KEC	KIA431A	----	----	----	----
1035-B	122671	32-TL431ACLP11	IC REF 3P TL431ACLP(+-1%)MOTOR		ON	TL431ACLP	----	----	----	----
1035-C	122678	32-TL431ACLP01	IC REF 3P TL431ACLP (+-1%) TI		TI	TL431ACLP	----	----	----	----
3004	136890	31-F7681VB066	C.ELE 680UF 200V V 22*45 SPS	C120,C121	----	----	----	----	----	----
3004-A	110107	31-F7681VB052	C.ELE 680UF 200V V 22*45 SMH		NCC	SMH200VSSN680V	----	----	----	----
3004-B	109428	31-F7681VB056	C.ELE 680UF 200V V 22*45 TS UP		MATSU	ECEC2DP681GY	----	----	----	----
4001	132576	42-M52512P02	XFMR S5251-2D ERL-35 PC40	T120	LITON	42-M52512P02	JETRO	42-M52512P02	TAIVO	42-M52512P02
					XEPEX	42-M52512P02	LISGI	42-M52512P02	----	----
4002	132963	42-M52512P03	XFMR S5251-2D EE-19 PC40	T501	LITON	42-M52512P03	JETRO	42-M52512P03	TAIVO	42-M52512P03
					LISGI	42-M52512P03	XEPEX	42-M52512P03	----	----
4005	132399	37-C5251203	PFC CHOKE EE43*35 H10	L102	LITON	37-C5251203	TAIVO	37-C5251203	JETRO	37-C5251203
*7001	119847	38-T63A5211	FUSE HSB 250V 6.3A 5*20 215(P)	F100	LITTL	21506.3-PGT	----	----	----	----
7004	134187	61-M38G	FAN 08S 12V 0.24A MW-825H12SII	FAN	T&T	MW-825H12SII	----	----	----	----
7004-A	118383	61-M38	FAN 08S12V0.25A AD0812HS-A70GL		ADDA	AD0812HS-A70GL	----	----	----	----
7004-B	134186	61-M38F	FAN 08S 12V 0.22A KD1208PTS1		----	----	----	----	----	----

TOTAL 2 PAGES

Note : This part is prepared by Design department for cost estimation.
All of indirect material as solder, flux, glue, thinner, cleaner etc. are not listed on this part list.

Design : _____ 2/13 03

PUR. : _____

LITE-ON ELECTRONICS, INC.
POWER CONVERSION

[redacted]

Design Critical Parts List

MODEL : PS-5251-2DFS_S1
UPDATE : 2003/2/7
REV : 0G

DATE : 2003/2/12
PAGE : 1

ITEM	PARTNO	OLDPARTNO	DESCRIPTION	LOCATION	MAKER1	MAKERPN1	MAKER2	MAKERPN2	MAKER3	MAKERPN3
1004	120889	32-UC3845BN01	IC PWM 8P UC3845BN MOTOR	IC300	ON	UC3845BN	----	----	----	----
1004-A	120882	32-UC3845BN	IC PWM 8P UC3845BN STM		STM	UC3845BN	----	----	----	----

TOTAL 1 PAGES

Note : This part is prepared by Design department for cost estimation.
All of indirect material as solder, flux, glue, thinner, cleaner etc. are not listed on this part list.

Design : 2/13 03

PUR. : _____

LITE-ON ELECTRONICS, INC.
POWER CONVERSION

[redacted]

Design Critical Parts List

MODEL : PS-5251-2DFS_S2
UPDATE : 2003/2/7
REV : 0G

DATE : 2003/2/12

ITEM	PARTNO	OLDPARTNO	DESCRIPTION	LOCATION	MAKER1	MAKERPN1	MAKER2	MAKERPN2	MAKER3	MAKERPN3
*1002	126569	32-TSM111CN	IC PG 20P TSM111CN STM	IC400	STM	TSM111CN	----	----	----	----
1003	116337	32-KA431AZ	IC REF 3P 2.495V KA431AZ(+-1%)	IC511	SAMSU	KA431AZ	----	----	----	----
1003-A	122671	32-TL431ACLP11	IC REF 3P TL431ACLP(+-1%)MOTOR		ON	TL431ACLP	----	----	----	----
1003-B	126574	32-KIA431A49	IC REF 3P 2.495V KIA431A1%TO92		KEC	KIA431A	----	----	----	----
1003-C	122678	32-TL431ACLP01	IC REF 3P TL431ACLP (+-1%) TI		TI	TL431ACLP	----	----	----	----
1012	114700	34-GKSA916Y26	TRX PNP 120V 0.8A KSA916YTO92L	Q531	FAIRC	KSA916Y	----	----	----	----
1012-A	100547	34-G2SA965	TRX PNP 120V0.8A 2SA965Y TO92M		TOSHB	2SA965Y	----	----	----	----
1012-B	128565	34-SKTA1023Y49	TRX PNP120V0.8A KTA1023YTO92L		KEC	KTA1023	----	----	----	----

TOTAL 1 PAGES

Note : This part is prepared by Design department for cost estimation.
All of indirect material as solder, flux, glue, thinner, cleaner etc. are not listed on this part list.

Design : _____ 2/13 03

PUR. : _____

DELL CONTROLLED PRINT

PROPRIETARY NOTE

THIS ITEM IS THE PROPERTY OF DELL COMPUTER CORP. ROUND ROCK, TEXAS AND CONTAINS CONFIDENTIAL AND TRADE SECRET INFORMATION. THIS ITEM MAY NOT BE TRANSFERRED FROM THE CUSTODY OF DELL COMPUTER CORP. EXCEPT AS AUTHORIZED BY DELL COMPUTER CORP. AND THEN ONLY BY WAY OF LOAN FOR LIMITED PURPOSES. IT MUST NOT BE REPRODUCED IN WHOLE OR IN PART AND MUST BE RETURNED TO DELL COMPUTER CORP. UPON REQUEST AND IN ALL EVENTS UPON COMPLETION OF THE PURPOSE OF THE LOAN. NEITHER THIS ITEM NOR THE INFORMATION IT CONTAINS M AY BE USED BY OR DISCLOSEDTO PERSONS NOT HAVING ANEED FOR SUCH USE OR DISCLOSURE CONSISTENT WITH THE PURPOSE OF THE LOAN WITHOUT PRIOR WRITTEN CONSENT OF DELL COMPUTER CORPORATION.

HIGHEST IDENTIFIER NO. USED

DIMENSION IDENTIFIER NO. NOT USED

REVISIONS

REV	ECO	DESCRIPTION	DATE	APRVD
A00-00	xxxxxxx	Initial release to production	xxxxxxxx	K.Asante

POWER SUPPLY SPECIFICATION FOR DELL P/N F0894 (VS P0389)

PWR SPLY,250W,PFC,3.3V,20+4,1W, SATA

A CURRENT ISSUE OF THIS DRAWING MUST INCLUDE A COPY OF THE FOLLOWING ECO'S:

ECO_____ DATE___/___/___

ECO_____ DATE___/___/___

ECO_____ DATE___/___/___

ECO_____ DATE___/___/___

ECO_____ DATE___/___/___

UNLESS OTHERWISE SPECIFIED ALL DIMENSIONS ARE IN INCHES [MILLIMETERS]

TOLERANCES

.XX [X.X] = ± .02 [0.5]
.XX [X.XX] = ± .02 [0.5]
.XXX [X.XXX] = ± .010 [0.25]
ANGULAR ∠ = ±0° 30'

HOLE DIAMETER

0 [0] THRU .250 [6.36] +.003 [0.08] -.002 [0.05]	.251 [6.37] THRU .500 [12.71] +.005 [0.13] -.003 [0.08]	.501 [12.72] AND UP +.010 [0.25] -.005 [0.13]

THREADS: EXT 2A, INT 2B

DRAWN	G. Villanueva	DATE 2/5/03
ENGINEER	Kwabena Asante	2/3/03
MFG. ENG.	J. Elliot	2/5/03
W.W.S.Q.E.	J. Groleau	2/5/03
MECH ENGINEER	Pay Darren	2/5/03
CHECKED	Bill Bain	2/5/03
RELEASE		

DELL COMPUTER CORPORATION
ROUND ROCK, TEXAS

TITLE: SPEC,PWR SPLY,250W,PFC,1W,DELL

SIZE	DWG NO.	REV.
A	P0389	A00-00

SCALE: NONE

SHEET 1 OF 28

TABLE OF CONTENTS

1. INTRODUCTION 4

1.1. SCOPE 4

1.2. SUPPLY OVERVIEW 4

1.3. APPLICABLE DOCUMENTS 5

2. ELECTRICAL SPECIFICATION 7

2.1. AC INPUT REQUIREMENTS 7
- 2.1.1. INPUT OVER CURRENT PROTECTION 7
- 2.1.2. INRUSH CURRENT LIMITING 7
- 2.1.3. LINE TRANSIENTS 8
- 2.1.4. EFFICIENCY 9
- 2.1.5. AC DROPOUT 9
- 2.1.6. STANDBY INPUT POWER 9
- 2.1.7. 1W MAXIMUM POWER REQUIREMENT 9
- 2.1.8. AC CONNECTOR REQUIREMENTS 9

2.2. OUTPUT REQUIREMENTS 10
- 2.2.1. DC VOLTAGE REGULATION 10
- 2.2.2. DC OUTPUT CURRENT 10
- 2.2.3. OUTPUT RIPPLE/NOISE 11
- 2.2.4. OUTPUT TRANSIENT RESPONSE 12
- 2.2.5. CLOSED LOOP STABILITY 12
- 2.2.6. CAPACITIVE LOAD 12
- 2.2.7. OVERSHOOT AT TURN-ON/TURN-OFF 12
- 2.2.8. DC CONNECTOR REQUIREMENTS 13
  - 2.2.8.1. SYSTEM CONNECTORS 13
  - 2.2.8.2. PERIPHERAL CONNECTORS 15

2.3. TIMING / HOUSEKEEPING 16
- 2.3.1. REMOTE ON/OFF CONTROL 16
- 2.3.2. POWER GOOD SIGNAL, POK or P_GOOD 17
- 2.3.3. HOLD-UP TIME 17
- 2.3.4. +5 VFP TURN-OFF 17

2.4. PROTECTION 18
- 2.4.1. OVER VOLTAGE PROTECTION 18
- 2.4.2. SHORT CIRCUIT PROTECTION 18
- 2.4.3. OVER CURRENT PROTECTION 18
- 2.4.4. RESET AFTER SHUTDOWN 18

3. MECHANICAL REQUIREMENTS 19

3.1. PHYSICAL DIMENSIONS 19

4. ENVIRONMENTAL REQUIREMENTS 19

4.1. TEMPERATURE 19

4.2. HUMIDITY 19

4.3. ALTITUDE 19

4.4. MECHANICAL SHOCK 19

4.5. VIBRATION 19
4.5.1. OPERATING VIBRATION 19
4.5.2. NON OPERATING VIBRAITON 20

4.6. THERMAL SHOCK 20

5. RELIABILITY 20

5.1. COMPONENT DERATING 20

5.2. LIFE EXPECTATIONS 21
5.2.1. MTB 21
5.2.2. DMTBF 21

5.3. FAN REQUIREMENTS AND FAN SPEED CONTROL 21

6. ELECTROMAGNETIC COMPATIBILITY 22

6.1. ELECTROMAGNETIC COMPATIBILITY 22
6.1.1. LINE CONDUCTED EMI EMISSIONS 22
6.1.2. RADIATED EMI EMISSIONS 22
6.1.3. ELECTROSTATIC DISCHARGE 23
6.1.4. RADIATED IMMUNITY 23
6.1.5. ELECTRICAL FAST TRANSIENT/BURST IMMUNITY 23
6.1.6. SURGE IMMUNITY 23
6.1.7. TOTAL HARMONIC DISTORTION 24
6.1.8. GAS DISCHARGE TUBES 24
6.1.9. SELV OUTPUT REQUIREMENTS 24
6.1.10. FIRE ENCLOSURE 24
6.1.11. OTHER REQUIREMENTS 24

6.2. PRODUCT SAFETY REQUIREMENTS 25
6.2.1. DELL BRANDED ITE ELECTROMAGNETIC REQUIREMENTS, AMERICAS 25
6.2.2. DELL BRANDED ITE ELECTROMAGNETIC REQUIREMENTS, ASIA/PACIFIC/JAPAN 25
6.2.3. DELL BRANDED ITE ELECTROMAGNETIC REQUIREMENTS, EUROPEAN COMMUNITY 26
6.2.4. DELL BRANDED ITE ELECTROMAGNETIC REQUIREMENTS FOR DELL DESIGN GOAL 27

7. PACKAGING AND SHIPPING 28

7.1. PACKAGING AND SHIPPING 28

10. MECHANICAL APPENDIX 29

1. INTRODUCTION

1.1. SCOPE

The scope of this document is limited to the requirements of a switching power supply with full range line input capability, remote ON/OFF, forced air cooling, thermal fan speed control, flea-power voltage (+5 VFP), and electrical characteristics per Table 1.

The supplier will make no change which alters the form, fit, and function or other requirements specified in this document unless approved in writing by Dell Computer Corporation or by a DELL ECR form.

1.2. SUPPLY OVERVIEW

TABLE 1. Power Supply Overview

Form-factor:		P/S-2 Standard Case	
Power:		250 Watts max. continuous	
Efficiency:		➤ 65% at full load Energy Star : < 20 watts of input power in sleep mode.	
Reliability: per MIL STD 217E and demonstrated @ 50 degrees C.		≥ 125K hours, at 25 degrees C, 95% C. L.	
Power Factor Correction.		must meet EN61000-3-2, EN61000-3-3. Class D limits.	
Output voltage [3]	Regulation	Min. current (amps)	Max. current [2] (amps)
+12 VDC:	±5%	0.0	16.0[4]
+5 VDC:	±5%	1.0 / 0.2[5]	22.0
+3.3 VDC:	±5%	0.1 / 0.0[1]	18.0
-	-	-	-
-12 VDC:	±10%	0.0	1.0
+5 VFP:	±5%	0.0	2.0

[1] In system applications where +3.3 VDC is not used, all other outputs will stay within regulation while the +3.3 VDC output is in a zero load condition.
[2] Maximum continuous combined load on +5 VDC and +3.3 VDC outputs shall not exceed 150watts.
[3] Outputs will meet and not exceed SELV requirements per electrical standards, i.e., UL1950, IEC950, EN60950 PAR.2.3.
[4] Peak +12 VDC output power (up to 17.0 amps) will not exceed 15 seconds in duration. Under this condition, tolerance on the +12v output, will be allowed to be ±10%.
[5] +5VDC minimum load will be 0.2A when there is a minimum load of 0.3A on the +12 VDC and 0.42A on the +3.3 VDC outputs simultaneously. +5V min load is 1A for load transient tests.

1.3. APPLICABLE DOCUMENTS

The latest revision in effect of the following documents forms a part of this specification to the extent specified:

.

AB13-94-146	EACEM European Association of Consumer Electronics Manufacturers. Hazardous Substance List / Certification.
IEEE Std. 587-1980 or IEEE/	IEEE Guide for Surge Voltages in Low-Voltage AC Power Circuits
ANSI C62.41-1991:	to "IEEE Recommended Practice on Surge Voltages in Low-Voltage AC Circuits.
ANSI C62.45-1992:	IEEE Guide on Surge Testing for Equipment Connected to Low-Voltage AC Power Circuits
MIL-STD-105K:	Quality Control
MIL-STD-217E:	Reliability Predictions for Electronic Equipment.
MIL-C-5541:	Chemical Conversion Coatings on Aluminum and Aluminum Alloys.
CSA C22.2 No.234, Level 3	Safety of Component Power Supplies. Intended for use with Electronic Data Processing Equipment and Office Machines.
CSA C22.2 No.950:-95, 3rd Edtn.	Safety of Information Technology Equipment, Including Electrical Business Equipment
UL 1950 3rd Edtn. without D3 Deviation	Standard for Safety of Information Equipment, Including Electrical Business Equipment.
IEC 950: plus A1, A2, A3, and A4.	Safety of Information Technology Equipment Including Business Equipment
EN60 950: plus A1, A2, A3 and A4.	Safety of Information Equipment, Including Electrical Business Equipment.
EMKO-TSE(74-SEC)207/94	Nordic National Requirement in addition to EN60950
CISPR 22 and EN 55022:	Limits and Methods of Measurements of Radio Interference Characteristics of Information Technology Equipment, Class B.
ANSI C63.4 - 1992	American National Standard for Methods of Measurement of Radio-Noise Emissions from Low-Voltage Electrical and Electronic Equipment in the Range of 9 kHz to 40 GHz for EMI testing.
EN55024: 1998	Electromagnetic compatibility/ITE immunity standard.
EN61000-3-2	EMC Limits for Harmonic Current Emissions.
EN61000-3-3	Limitation of Voltage Fluctuations and Flicker in Low Voltage Supply for Equipment with Rated Current ≤ 16 amps.

IEC801-/IEC1000-4-	Electromagnetic compatibility for industrial-process measurement & control equipment.
	-2 ESD Requirements.
	-3 Immunity to Radiated Electromagnetic Fields.
	-4 Electrical Fast Transients/Burst Requirements.
	-5 Surge Voltages
	-6 Immunity to Conduction R.F. Voltage
	-8 Immunity to Power – Frequency Magnetic Fields
	-11 Immunity to Voltage Variations and Interruptions
IEC Publication 417	International Graphic Symbol Standard.
ISO Standard 7000	Graphic Symbols for use on Equipment.
ISO Standard 7779	Acoustic Specification
FCC Part 15 Sub-Part B	Class B Operation
Dell Spec 11500	Dell Computer Inbound Packing Specification
Dell Spec 00121 Specification	Dell Computer Packing Test Procedure
Dell Spec 13190	Dell Computer Supplier Labeling Specification
Dell Corp. Cosmetic Standard	Dell Corp. Cosmetic Standard # 6724U
Dell Standard # 64MNT	Dell Product Safety Insp. Procurement
TC110	CENELEC Generic Immunity Standard
ANSI Y14.5M – 1982	Dimension Specifications
Dell Spec 6T198	Dell Computer Materials restricted for use

1.4 REVISION HISTORY

Rev X00-00

1. Started with spec number 2N333 Rev A00-00

Rev X00-01

1. Section 1.3 Added reference to Material Restricted for use. 1/20/03
2. Section 2.1.7 Vendors do not need to meet 1W requirement for 220VAC, 50 Hz. 1/20/03
3. Section 4. Updated Shock and Vibration section. 1/20/03
4. Section 5. Included reference to Dell derating guideline D/N REL0054. 1/20/03
5. Section 6. Updated EMC section. 1/20/03
6. Section 1.2; 2.2.2; 2.2.4 and 2.4.3 Updated max and peak current on +12V rail to 16A and 17A respectively 1/20/03

Rev A00-00 changes

1. Section 1.3 Deleted Dell Spec 93334 based on James Groleau's email 1/16/03. 1/28/03
2. Section 2.2.8.2. Added terminal, housing and wire gauge requirement. 1/28/03

Rev A00-00 changes

1. Section 1.3 Deleted Dell Spec 93334 based on James Groleau's email 1/16/03. 1/28/03
2. Section 2.2.8.2. Added terminal, housing and wire gauge requirement. 1/28/03

3. Page 1 Changed heading to read "Power Supply Spec for Dell P/N F0894 (VS P0389) 1/30/03

4. Section 6 and 2.2.8.2 Changed flammability requirement for peripheral connectors from 94V-0 to 94V-2, updated regulatory requirements 1/30/03

5. Section 3.1. Added reference to mechanical specification D/N W0454. 1/31/03

2. ELECTRICAL SPECIFICATION

The requirements that follow are to be met over the environmental ranges specified in Section 4 and all line conditions unless otherwise noted.

2.1. AC INPUT REQUIREMENTS

The power supply will operate in the ranges stated below.

TABLE 2. AC Input Line Requirements

Parameter	Min.	Max.	Unit
Range 1: V_{in}	90	135	VAC_{rms}
Range 2: V_{in}	180	265	VAC_{rms}
V_{in} Frequency	47	63	Hz
I_{in} (115 VAC)		6.0	A_{rms}
I_{in} (230 VAC)		3.0	A_{rms}

2.1.1. INPUT OVER CURRENT PROTECTION

The power supply will incorporate primary fusing for input Over Current Protection. **The fuse will be a slow blow or time delay type fuse, high breaking capacity.**

2.1.2. INRUSH CURRENT LIMITING

TABLE 3. Inrush Current Limit

Nom-Line	Cold Inrush Limits	Hot Inrush Limits
115VAC	$35A_{PK}$	$70A_{PK}$
230VAC	$70A_{PK}$	$140A_{PK}$

Repetitive ON/OFF cycling of the AC input voltage will not damage the power supply or cause any damage to the power supply or the input fuse to blow. Half cycle peak inrush current, peak repetitive input current, and worst case power factor will be verified and reported by the vendor. The above inrush current values are for reference only.

2.1.3. LINE TRANSIENTS

2.1.3.1. SLOW TRANSIENTS

The DC output(s) will meet the performance criteria listed when subjected to the input power line noise defined in Table 4. Additional requirements for sag, surge and dropout specified in Table 5 (and referenced to a 230 VAC, 50 Hz nominal input line voltage) will be met.

TABLE 4. Line Voltage Transient Limits:

TRANSIENT EVENT AT THE NOMINAL INPUT LINE FREQUENCY	DURATION	AMPLITUDE RELATIVE TO AC LINE
SURGE	50 ms-500 ms	+10% above 120/240 VAC
SAG	50 ms-500 ms	-10% below 90/180 VAC
SAG	0.5 ms-20ms	-100% below 90/180 VAC
SURGE	0.5 ms-8.33 ms	+30% above 120/240 VAC

Note: The power supply will be loaded to 50% of the maximum load specified in Section 2.2.2.

TABLE 5. Additional Requirements.

TEST EVENT FROM NOMINAL 230 VAC, 50 Hz	DURATION	PERFORMANCE CRITERIA
15% SAG (195.5 VAC, 50 Hz)	15 min.	No loss of function or performance.
30% SAG (161.0 VAC, 50 Hz)	20ms	No loss of function or performance.
50% SAG (115.0 VAC, 50 Hz)	100 ms	Loss of function allowed self-recoverable
DROPOUT (0.0 VAC)	500 ms	Loss of function allowed self-recoverable
10% SURGE	15 min.	No loss of function or performance.

Note: The power supply will be loaded to 50% of maximum load during this testing except for the Dropout test where the load will be 100%. The power supply will need to operate in a worldwide environment, and transient conditions in such an environment may exceed the applicable standards in Tables 4 and 5. Therefore, the vendor will provide recommendations for additional transient limits for the power supply.

2.1.4. EFFICIENCY

2.1.4.1. FULL LOAD EFFICIENCY

The power supply will be a minimum of **65%** efficient at maximum loading conditions as defined under temperature and operating conditions in Section 4.

2.1.5. AC DROPOUT

If the Input power to the power supply is interrupted for longer than the Hold-Up time of 16 mSec, the supply need not maintain regulation, but it must not latch itself off in such a way that it cannot power up normally/automatically when the input power is restored.

2.1.6. STANDBY INPUT POWER/ BLUE ANGEL

The AC power will not exceed 5 watts (RMS) when product is in the DC disabled state (PS_ON is high) and the load on the +5VFP is a minimum of 0.4 amps (2watts dc). Vin=230vac, 50Hz.

2.1.7 1W MAXIMUM POWER REQUIREMENT

During remote off condition of the power supply unit, the power supply unit will draw no more than 1W from the ac outlet at 120Vac, 60Hz when a load of 0.5W is applied to its +5VSB rail.

2.1.8 AC CONNECTOR REQUIREMENTS

The AC input receptacle will be a KLAR & BEILSCHMIDT 42R02-3112 type or Dell approved equivalent. The power supply will incorporate a manual AC input select between the 90-135 VAC and 180-265 VAC ranges. No main AC switch is desired other than the DC PS-ON circuit.

Dell approved equivalent means that it is approved during qualification of the original design and therefore exits on the original bill of materials at production release. Any changes thereafter require the use of the Dell ECR documentation for tractability.

2.2 OUTPUT REQUIREMENTS

2.2.1. DC VOLTAGE REGULATION

The DC output voltages will remain within the regulation ranges shown in Table 6 when measured at the load end of the output connectors.

The voltage regulation limits do not include transient DC load changes, which are covered in Section 2.2.4.

TABLE 6. DC Output Voltage Regulation

Parameter	Min.	Nom.	Max.	Unit
+12 VDC	+11.40	+12.00	+12.60	Volts
+ 5 VDC	+4.75	+5.00	+5.25	Volts
+ 3.3 VDC	+3.135	+3.30	+3.465	Volts
-12 VDC	-10.80	-12.00	-13.20	Volts
-	-	-	-	-
+ 5 VFP	+4.75	+5.00	+5.25	Volts

2.2.2. DC OUTPUT CURRENT

TABLE 7. DC OUTPUT CURRENT LOAD RANGES

Range	Parameter	Min.	to	Max.[1]	Peak[2]	Unit
Range 1	+12 VDC	0.0	-	2.0	17.0	Amps
	+ 5 VDC	1.0/ 0.2[5]	-	7.0	-	Amps
	+3.3 VDC	0.1/0.0[3]	-	3.0	-	Amps
	-	-	-	-	-	Amps
	-12 VDC	0.0	-	0.1	-	Amps
	+ 5 VFP	0.0	-	0.5	-	Amps
Range 2	+12 VDC	1.0	-	5.0	17.0	Amps
	+ 5 VDC	2.0	-	22.0	-	Amps
	+3.3 VDC	0.1/0.0[3]	-	12.0	-	Amps
	-	-	-	-	-	Amps
	-12 VDC	0.0	-	1.0	-	Amps
	+ 5 VFP	0.0	-	2.0	-	Amps
Range 3	+12 VDC	1.0	-	6.0	17.0	Amps
	+ 5 VDC	4.0	-	22.0	-	Amps
	+ 3.3 VDC	0.1/0.0[3]	-	18.0	-	Amps
	-	-	-	-	-	Amps
	-12 VDC	0.0	-	1.0	-	Amps
	+ 5 VFP	0.0	-	2.0	-	Amps
Range 4	+12 VDC	5.0	-	16.0 [4]	17.0	Amps
	+ 5 VDC	4.0	-	22.0 [4]	-	Amps
	+ 3.3 VDC	2.0	-	18.0 [4]	-	Amps
	-	-	-	-	-	Amps
	-12 VDC	0.0	-	1.0 [4]	-	Amps
	+ 5 VFP	0.0	-	2.0 [4]	-	Amps

Notes:
When the load current is outside of the above ranges (table 7), but within each outputs current range specification (table 1), the +5v, +12v, +3.3v outputs are allowed to regulate @ ±10% of

nominal DC voltages. No damage or hazardous condition will occur with all of the DC output connectors disconnected from the load. The power supply may enter into the shut down state.

[1] Max. continuous total DC output power will not exceed 250 watts.
[2] Peak +12 VDC output power (up to 17.0 amps) will not exceed 15 seconds in duration. Under this condition the tolerance on the +12v output will be allowed to be ±10%.
[3] In applications where there is no 3.3 volt load in the system, these values may be 0A without affecting the regulation on the other outputs.
[4] Adjust each output to it specified maximum load, while adjusting the other outputs down, such that the total output power is not over the specified continuous power specification.
[5] +5VDC minimum load will be 0.2A when there is a minimum load of 0.3A on the +12 VDC and 0.42A on the +3.3V simultaneously. +5V min load is 1A for load transient tests.

2.2.3. OUTPUT RIPPLE/NOISE

The following output ripple/noise requirements will be met throughout the load ranges specified in Section 2.2.2. and under all input voltage conditions as specified in Section 2.1.

Ripple and noise are defined as periodic or random signals over frequency band of 10 Hz to 30 MHz. Measurements will be made with an oscilloscope set to 20MHz bandwidth limit. The outputs will be bypassed with one 0.1uF multilayer (type X7R) and one 10uF electrolytic (low ESR) capacitors. Outputs will be tested per the setup in the Figure below.

TABLE 8. DC Output Noise/Ripple

Parameter	Max.
+12 VDC	120 mV_{pp}
+5 VDC	70 mV_{pp}
+3.3 VDC	50 mV_{pp}
-	-
-12 VDC	250 mV_{pp}
+ 5 VFP	100 mV_{pp}

Figure for Common Mode Noise Test Setup.

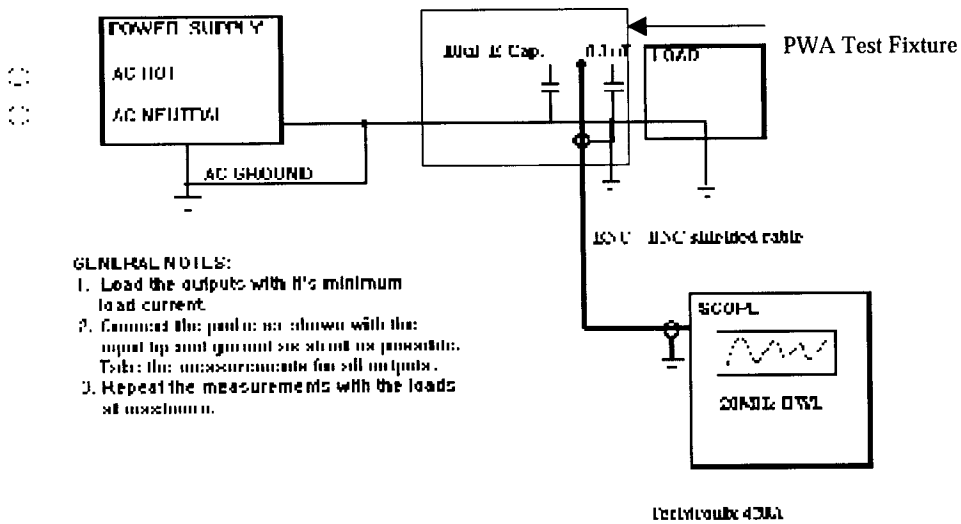

2.2.4. OUTPUT TRANSIENT RESPONSE

The output voltage will remain within specified regulation limit of the nominal set voltage for changes in load as specified below under the following load steps defined below. At a slew rate of 0.1Amps/uS between 50Hz to 10KHz.

TABLE 9. DC Output Transient Response

Parameter	Load Step Output Range	Load Step (1.)	Overshoot / Undershoot and pk-pk limits
+12 VDC	0.2 A to 16 A	50%	± 600mv ≤ 1.2v pk-pk.
+5 VDC	1.0 A to 22 A	33%	± 250mv ≤ 0.5v pk-pk.
+3.3 VDC	0.3A to 18 A	33%	± 170mv ≤ 0.34v pk-pk.
+5 VFP	0.0 A to 2 A	33%	± 250mv ≤ 0.5v pk-pk.
-12 VDC	0.0 A to 1A	33%	± 600mv ≤ 1.2v pk-pk.

1. Worst case pk-pk analysis, frequency response is required (refer to Dell Bench Tests, section 10). Outputs will not have ringing when voltage recovers.

2.2.5. CLOSED LOOP STABILITY

Closed-loop stability must be ensured throughout the load range specified in Section 2.2.2. The Phase margin will be a minimum of 30 degrees at all points where the gain is unity or greater.

Each Bode Plot document will have Phase and Gain Margin data, line and load conditions, as well as the oscillator injection level. For verification purpose's the plots will have the method of test and injection points clearly documented on a current schematic.

2.2.6. CAPACITIVE LOAD

The power supply will be able to power up and operate normally with the following capacitance's simultaneously present on the DC outputs:

Output Voltage:	-12 VDC	+3.3 VDC	+5 VDC	+12 VDC
Capacitive load (µF):	350	6,000	15,000	4,000

2.2.7. OVERSHOOT AT TURN-ON/TURN-OFF

The output voltage overshoot (upon the application or removal of the input voltage under the conditions specified in Section 2.1) will be less than 10% above the nominal voltage. And will settle within the regulation band in less than 20 ms.

There must be a smooth and continuous transition of each DC output voltage (from 10% to 95% of its final set point within the regulation band) while loaded as specified in Section 2.2.2. No voltage of opposite polarity will be present on any output during turn-on or turn-off.

2.2.8. DC CONNECTOR REQUIREMENTS

All connectors will be stamped or identified by a label on the connector. The DC connector harness lengths are shown in Mechanical Appendix. Listed or recognized component appliance wiring material (AVLV2), CN, rated min. 85 °C, 300 VAC will be used for all output wiring.

2.2.8.1. SYSTEM CONNECTORS

P1
20 pin connector (sources below) or Dell approved equivalent:
18 AWG stranded wire (≥19 strands), except the 3.3V wires...these will be 16 AWG

18 AWG Wire	Signal	Pin	Pin	Signal	18 AWG Wire
Orange	+3.3 VDC[4]	11	1	+3.3 VDC[4]	Orange
Blue	-12VDC	12	2	+3.3 VDC[4]	Orange
Black	COM	13	3	COM	Black
Green	PS_ON	14	4	+5 VDC	Red
Black	COM	15	5	COM	Black
Black	COM	16	6	+5 VDC	Red
Black	COM	17	7	COM	Black
N/C	N/C	18	8	POK	Gray
Red	+5 VDC	19	9	+5VFP	Purple
Red	+5 VDC	20	10	+12VDC	Yellow

4. The 3.3VDC output wires (Orange color) must be 16 AWG.
The 3.3VDC terminals are high current type (9A current rating / Molex-HCS type)

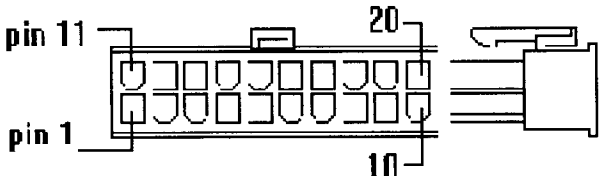

Approved Equivalent, 94V-0 material, with Phosphor Bronze (tin plated) terminals.

		Housing:	Terminals:
1.	CVILUX:	CP-01120030	CP01100104
2.	Molex:	39-01-2205	39-00-0059
			44476-3111 (For AWG#16 wire)
3.	Carol:	CL4201H00-20P	CL4201T0P-2

Dell approved equivalent means that it is approved during qualification of the original design and therefore exits on the original bill of materials at production release. Any changes thereafter requires the use of the Dell ECR documentation for tractability.

P2
Connector:, 18 AWG stranded wire (>=19 strands) 4 pin connector, or Dell approved equivalent.

PIN	Signal	18 AWG Wire
1	COM	Black
2	COM	Black
3	+12 VDC	Yellow
4	+12 VDC	Yellow

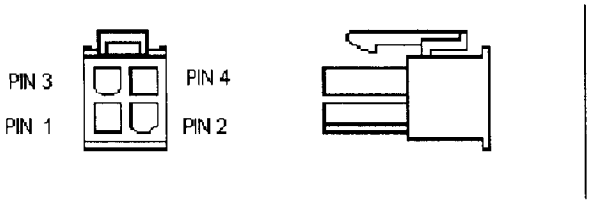

Approved Equivalent, 94V-0 material, with Phosphor Bronze (tin plated) terminals.

	Housing:	Terminals:
1. Molex:	39-01-2045	5556 female crimp terminal
2. CVILUX:	CP-01104030	CP01100104

Dell approved equivalent means that it is approved during qualification of the original design and therefore exits on the original bill of materials at production release. Any changes thereafter requires the use of the Dell ECR documentation for tractability.

2.2.8.2. PERIPHERAL CONNECTORS

P3,P5,P6,P8,P9
4 pin connector or Dell approved equivalent: 18 AWG stranded wire (≥19 strands)

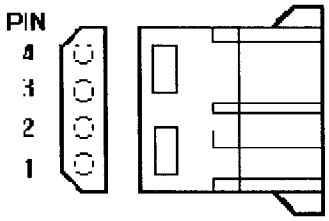

Approved Equivalent, 94V-2 material, with **Brass** (tin plated) terminals.

	Housing:	Terminals:
1. CAROL:	CL5080H00-4P	CL5080T2B-2
2. AMP:	770827-1	61117-1
3. JWT:	C5082H00-4P	C5082T2B-2 / C5082T0B-2
4. CVILUX:	CP-3204SM000	CI-3504S0000

NOTE: **Terminals will be Brass, tin plated only.**

P7

Connector, 22 AWG stranded wire (>=19 strands) 4 pin connector, or Dell approved equivalent.

PIN	Signal	22 AWG Wire
1	+5VDC	Red
2	COM	Black
3	COM	Black
4	+12 VDC	Yellow

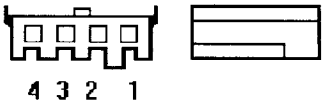

Approved equivalents: 94V-2 material, with Phosphor Bronze (tin plated) terminals.

	Housing:	Terminals:
1. CAROL:	CL2540H00-4P	CL2540T0P-2
2. AMP:	171822-4	170262-2
3. JWT:	A2544H00-4P	A2544T0P-2
4. CVILUX:	CI-3504S0000	CI-35T021PE0

Dell approved equivalent means that it is approved during qualification of the original design and therefore exits on the original bill of materials at production release. Any changes thereafter requires the use of the Dell ECR documentation for tractability.

P4

Connector, 18 AWG stranded wire (>=19 strands) 6 pin connector, or Dell approved equivalent.

Pin #	18 AWG Wire	Signal
1	No Connect	-
2	Black	COM
3	Black	COM
4	Orange	+3.3VDC
5	Red	+5VDC
6	Yellow	+12VDC

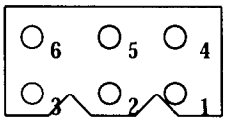

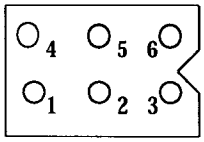

Approved equivalents: 94V-2 material, with brass (tin plated) terminals.

	Housing:	Terminals:
1. AMP:	770086-1	350415-1

Dell approved equivalent means that it is approved during qualification of the original design and therefore exits on the original bill of materials at production release. Any changes thereafter require the use of the Dell ECR documentation for tractability.

2.3. TIMING / HOUSEKEEPING

(refer to Figure A)

+5vfp to DC Outputs Turn On Delay Time	5ms $\leq T_1 \leq$ 300 ms
+5vfp,+5v, +12v, +3.3v Output Rise Time	2ms $\leq$ T2 $\leq$ 20 ms
POK/Pgood Turn On Delay Time	100 ms $\leq T_3 \leq$ 500 ms
DC Outputs Pre Warning Time	$T_4 \geq$ 1 ms
+5 vfp Hold Up Time	$T_5 \geq$ 5 ms
AC to PGood Hold UP Time	$T_6 \geq$ 16 ms
PS_ON to OutputsTurn On Delay Time	1 ms $\leq$ T7 $\leq$ 350 ms
-12v, Output Rise Time	0.1 ms $\leq$ Tr $\leq$ 20 ms
** +5v, +3.3v Output Power Up / Down	** +3.3v is held lower than +5v

Note: At nominal AC line conditions: +5v, +3.3v, +12v, -12v and +5vfp will rise/fall at a smooth continuous rate. +5V, +12V and +3.3V will rise to 95% of nominal within 20msecs of each other.

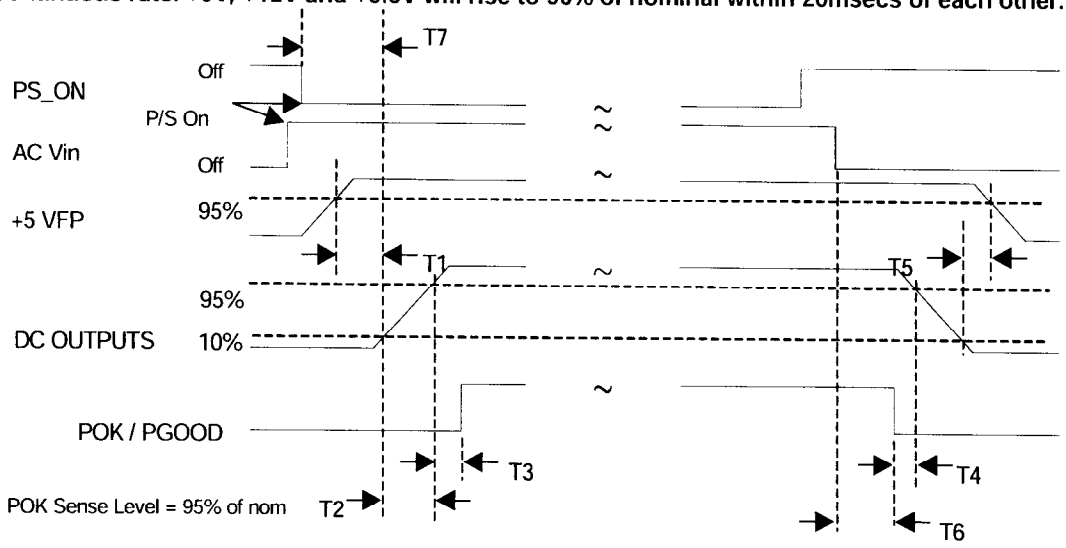

FIGURE A. Power Supply Timing

2.3.1. REMOTE ON/OFF CONTROL

The power supply DC outputs will be enabled with an active-low when pulled down to 0.8v or less with 1ma of load. When PS-ON is pulled to 2.0v or higher or open circuited, the DC outputs are to be disabled.

Provision for de-bouncing will be included in the PS-ON circuitry to prevent the power supply from oscillating on/off at startup.

2.3.2. POWER GOOD SIGNAL, POK or P_GOOD

A 'Power Good' signal, POK, will be asserted (i.e. high) by the power supply to indicate that the +12 VDC, +5 VDC and +3.3 VDC outputs are above the under-voltage thresholds listed in Section 2.3.1. and sufficient mains energy is stored by the converter to guarantee continuous power operation within specification for at least the duration specified in 'Hold Up Time'. Conversely, when either of these output voltages falls below the under-voltage threshold, or when mains power has been removed for a time sufficiently long to no longer guarantee power supply operation beyond the hold-up time, POK will be held low. The electrical and timing characteristics of the POK signal are given in the following table.

When one of these outputs go below their specified minimum regulation levels, POK will be held low.

POK Signal Characteristics:

Signal Type:	Open collector +5 VDC, TTL compatible
Logic level low:	< 0.4V while sinking 4 mA
Logic level high:	between 2.4 VDC and 5 VDC output while sourcing 200 µA
High state output impedance:	1KΩ from output to common

2.3.3. HOLD-UP TIME

Hold-Up time for a Nom Line (115VAC) = 16 mSec (min.)
Hold-Up time for a Nom Line (230V) = 16 mSec (min.)

The power supply will maintain output regulation per Section 2.2.1 despite a loss of input power at maximum output load as specified in Section 2.2.2. for a minimum of 16 ms.

2.3.4. +5 VFP TURN-OFF

Following removal of AC power, the VFP output will remain at it's steady state value until such time as it begins to decrease in voltage. The decrease will be monotonic in nature dropping to 0.5 volts or less. There will be no other perturbations of this voltage at or following removal of AC power.

2.4. PROTECTION

2.4.1. OVER VOLTAGE PROTECTION

The supply will provide latch-off Over Voltage Protection as defined below. The +5 VFP need not latch off and will recover automatically when normal conditions are restored.

TABLE10. Over Voltage Protection

Parameter	Min.	-	Max.	Unit
+12 VDC	13.5	-	15.0	V
+5 VDC	5.60	-	7.0	V
+3.3 VDC	3.76	-	4.3	V

2.4.2. SHORT CIRCUIT PROTECTION

An output short circuit is defined as any output impedance of less than 0.1 ohms. The power supply will latch off for shorting +3.3V, +5V or +12 VDC outputs without damage to overseers or to the unit (components, PCB traces, connectors, etc.) under the input conditions specified in Section 2.1 above. . The -12V is optional. The power supply shall restart after recycling power per 2.4.4.

The 5VFP must be capable of being shorted indefinitely without damaging the power supply. The power supply will either shut off or latch off.

2.4.3. OVER CURRENT PROTECTION

Overload is a fault condition defined as a 10 A/sec current ramp starting from full load applied to each output. The respective outputs of the power supply will go into protection mode before exceeding the OCP limits as indicated in the following table. The power supply shall latch off (except +5VFP). The power supply shall restart after recycling power per 2.4.4.

Parameter	Maximum Load	Over-Current limit
+5 VDC	23 A	47 A
+3.3 VDC	19 A	35 A
+12 VDC	17 A	19 A
+5 VFP	3 A	5 A

The above Over-current limits will be satisfied throughout the operating temperature range in section 4.
The +5v, +12v, +3.3v outputs are allowed to regulate @ ±10% of nominal DC voltages. When the load current is outside the range of table 7, but within each outputs current limit above.

2.4.4. RESET AFTER LATCHOFF

If the power supply goes into a shutdown state due to fault condition on its outputs, the power supply will return to normal operation only after the fault has been removed and the Power Supply has been Power-cycled. Shutdown and latch off is defined as: all output voltages (except +5vfp) are less than 0.5v dc. Power cycling is defined as:

(a) Removing AC input power for a maximum of 15 sec, or
(b) De-asserting PS_ON for a minimum of 0.1 sec to a maximum of 2 sec.

3. MECHANICAL REQUIREMENTS

3.1 PHYSICAL DIMENSIONS

The supply shall be based on the PS/2 form factor. The chassis shall be compatible and meet the physical outline shown in D/N W0454.

4. ENVIRONMENTAL REQUIREMENTS

4.1. TEMPERATURE

Operating Ambient:	+10°C min. +50°C max. (At full load, with a maximum rate of change of 5°C/10 minutes, but no more than 10°C/hr)
Non-operating Ambient:	-40°C to +70°C (Maximum rate of change of 20°C/hour)

4.2. HUMIDITY

Operating:	To 85% relative humidity (non-condensing)
Non-Operating:	To 95% relative humidity (non condensing)

(NOTE: 95% R.H. is achieved with a dry bulb temp. of 55°C and a wet bulb temp. of 54°C.)

4.3. ALTITUDE

Operating:	To 10,000 ft
Non-Operating:	To 50,000 ft

4.4. MECHANICAL SHOCK

The device will withstand the following imposed conditions without experiencing non-recoverable failure or deviation from specified output characteristics.

Non–Operating Square Wave Shock	40G faired, square wave at 200 in/sec on all six sides.
Non-Operating Half Sine Wave Shock	142G's, 2ms duration on all six sides
Operating Half Sine Wave Shock	82G's, 2ms duration on all sides except where AC adapter is facing down

4.5. VIBRATION

The device will withstand the following imposed conditions without electrical or mechanical failure. Plane of vibration to be along three mutually perpendicular axes.

4.5.1. OPERATING VIBRATION

The device will withstand the following imposed conditions without electrical or mechanical failure. The supply must remain within +/-10% of its pre-tested voltage throughout all test phases.

0.5Grms random vibration on 5 sides (the side where the AC adapter is facing down will not undergo testing) for a duration of 30 minutes/side.
The P.S.D. break points are as follows:

Hz.	G^2/Hz
7	.00015
20	.0014
140	.0014
312	.000065
400	.00004
600	.000035
700	.000035
800	.000023

4.5.2. NON OPERATING VIBRATION

The device will withstand the following imposed conditions without electrical or mechanical failure. The supply must remain within +/-10% of its pre-tested voltage throughout all test phases.

0.712Grms random vibration on all six sides for a duration of 30 minutes/side.
The P.S.D. break points are as follows:

Hz.	G^2/Hz
7	.0003
20	.00275
140	.00275
312	.00013
400	.00008
600	.00008
700	.00007
800	.000045

4.6. THERMAL SHOCK

Non-operating: -40°C to +70°C, 10 cycles, transition time not to exceed 5 minutes, duration of exposure to temperature extremes will be 20 minutes.

5. RELIABILITY

5.1. COMPONENT DERATING

The latest Dell derating guideline D/N REL0054 will be followed and documented in the calculated MTBF report provided to Dell reliability group.

5.2. LIFE EXPECTATIONS

5.2.1. CALCULATED MTBF

The Supplier will provide a Calculated MTBF of (125,000 hours minimum) and maintain traceable documentation for each revision level. The MTBF of the power supply will be calculated in accordance with MIL-STD-217E or latest edition. 115vac, 230vac, full load, 25 deg. C.

5.2.2. DEMONSTRATED MTBF

The supplier will demonstrate with 95% confidence that the MTBF is at least 125,000 hours at 50 degrees Celsius at full load. The supplier will document and provide to DELL the test method/description on how the test will be setup, conducted and statistically interpreted.

5.3. FAN REQUIREMENTS AND FAN SPEED CONTROL

The power supply will provide forced air cooling by means of a DC fan indicated in of the Mechanical Appendix. The 80mm diameter cooling fan will be mounted to the PSU case. The fan will be a Sleeve Bearing Fan. The vendor will be responsible for qualifying, approving and maintaining the fans quality level, which is subject to approval from Dell Power Supply Development. The Vendor will utilize a Thermal Fan Speed Control (TFSC) circuit with the appropriate electrical functionality such that changes to the fan speed control circuit can be made to satisfy the speed specifications as indicated in the following paragraph.

The power supply will utilize a thermal fan speed controller utilizing a thermistor on the supply's main heat sink as close as possible to the major heat source. The fan RPM will be set to the absolute lowest RPM (without stalling), at 40watts of rated load of the power supply at an ambient of 25 degrees C. RPM(H) will be at 3,000 +/- 10% at 80 % to 100% of the rated load of the power supply and at an ambient of 50 degrees C. The TFSC will allow the fan speed to vary to a maximum rpm when the supply is 80% of its rated output.

Test Point: 40watts, power supply ambient is 25 degrees C, RPM(L)=1,500 maximum RPM.
(below 40watts, and 10 to 25 degrees C., the fan will remain spinning)

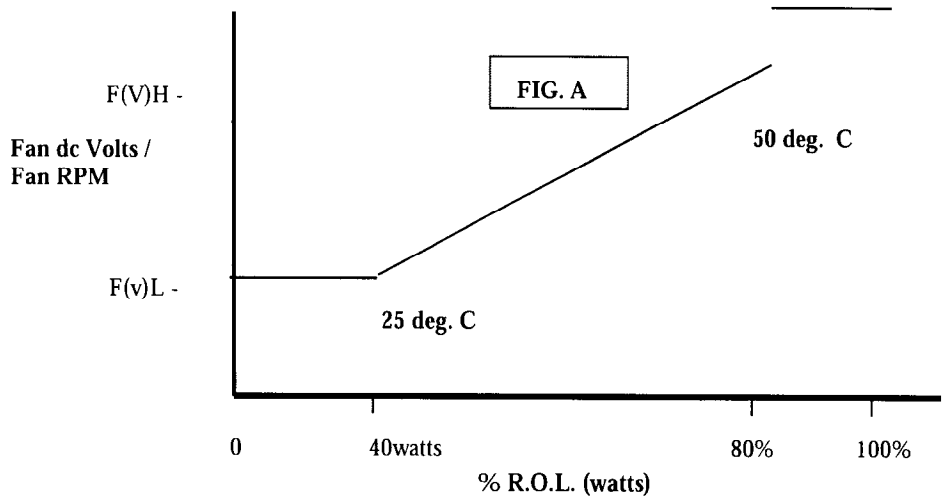

6. WORLDWIDE REGULATORY REQUIREMENTS

6.1. PRODUCT SAFETY REQUIREMENTS

6.1.1. STANDARDS AND AGENCY APPROVALS

The following is a list of the safety standards that this product must conform to:

Country	Reference and Title of Standard	Regulatory Mark
United States	• UL 1950 3rd Edition (without D3 Deviations): Safety of Information Technology Equipment.	UL
Canada	• Canadian Standards Association: CSA 22.2 No.60950: 00, 3rd Edition (without D3 Deviations): Safety of Information Technology Equipment.	CSA or "cUL"
Germany & EU countries	• EN 60950: 3rd Edition	TUV or VDE
Norway, Sweden, Denmark, Finland	• IEC 60950: 3rd Edition • EN 60950: 3rd Edition	NEMKO
China		
	• China Standards GB4943	CCC
World wide	• CB (Certified Body) Certificate and Report issued by NEMKO • IEC 60950: 3rd Edition	

6.1.2. REQUIRED DOCUMENTATION

Copies of the following items shall be submitted to DELL:

- UL test report and Notice of Authorization
- CSA or cUL report/approval
- TUV Certificates
- CCC Certificates
- Nemko Certificate
- Nemko CB Certificate(s) and CB report(s)[1,2]
- Schematics[3]
- BOM's (Bill of Materials)[3]
- List of Thermal Couple points

Note:

1. The CB report must include input current, leakage and heating test data performed at 134V (required to meet Saudi Arabia requirements).
2. The CB report must include abnormal testing of the voltage selector switch (if present). If the power supply is rated 100-120V / 200-240V but does not have a voltage selector switch (auto range circuit instead), then a statement must be present in the abnormal tests that the auto range circuit did not constitute a hazard.
3. Schematics and BOM's revision numbers must correlate, and the model designation needs to be specified on each page of the schematics and BOM's.

6.1.3. LEAKAGE CURRENT

Normal Leakage Current: Chassis Leakage Current shall not exceed 3.5mA in accordance to IEC 60950 Class I equipment

Medical Leakage Current: Chassis Leakage Current shall not exceed 300uA at 127VAC, 60Hz when tested per NFPA 99 (1996 Edition), Clause 7-5.1.3.5

6.1.4. FLAMMABILITY

The following is a list of the minimum acceptable flammability ratings for the parts used within the power supply unit:

- Printed circuit boards, including all daughter cards V-0
- Magnetic assemblies must be constructed of materials with a UL flame class of VW-1, V-1 or better, or meet the flammability requirements of V-1 or better when tested per the procedures as specified in Appendix A6 of IEC 950. The test is to be applied to the magnetic assembly (not a material sample) without the assembly being precondition prior to the test.
- Power connectors to Motherboard are to be of V-0 or better.
- Peripheral connectors to be of V-2 or better.

6.1.5. DIELECTRIC STRENTH TESTING

Each unit must pass a 2121V DC production hi-pot test. The voltage must be ramped up to 2121V DC within 0.8 second and it must be maintained at that level for a minimum of 1 second without failure.

Each unit must be marked to indicate it passed the test.

All production level power supplies must have this test performed.

6.1.6. GROUND CONTINUITY

Each unit must pass a production ground continuity test with less than 0.1 ohm from the safety ground (third wire) input pin to the power supply chassis.

Each unit must be marked to indicate it passed the test.

All production level power supplies must have this test performed.

6.1.7. METAL OXIDE VARISTORS

Any Metal Oxide Varistor (MOV) used in this product must be UL recognized component. MOVs must be properly placed or shielded to prevent a compromise of safety insulation in the event of a failure. MOVs installed line-to-ground must be in series with a gas discharge tube or other inherently low leakage current component.

6.1.8. GAS DISCHARGE TUBES

Any gas discharge tube used in this product must have an internal electrode worse case minimum spacing of 2.0mm. Creepage distances between internal electrodes and between external leads must be at least 3.5mm.

6.1.9. SELV OUTPUT REQUIREMENTS

All secondary outputs shall be SELV/non-energy hazardous. If any outputs do not meet the requirements of Level III SELV and non-energy hazard, the supplier must clearly identify these outputs to DELL engineering.

6.1.10. FIRE ENCLOSURE

The power supply must provide its own fire enclosure to comply with UL 60950/IEC 60950, Clauses:

- Clause 4.6

➢ Minimizing anything from entering the power supply and contacting hazardous voltages.
➢ Minimizing the possibility of the emission of burning material from the power supply.

No Conditions of Acceptability will be permitted.

6.1.11. OTHER REQUIREMENTS

The power supply must comply with Dell Product Safety Inspection Procurement, Dell P/N 64MNT.

6.2. PRODUCT SAFETY REQUIREMENTS

6.2.1. DELL BRANDED ITE ELECTROMAGNETIC REQUIREMENTS, AMERICAS

In accordance with FCC rules and regulations, testing for the United States market must be performed by a NVLAP or A2LA accredited EMC laboratory.

IBU	Reference and Title of Standard	Regulatory Mark
United States	• Federal Communications Commission, Title 47 US CFR -- Part 2, Frequency Allocations and Radio Treaty Matters, General Rules and Regulations	FCC
	• Title 47 US CFR -- Part 15 Radio Frequency Devices	
	• ANSI C63.4 (1992) – Methods of measurement of radio noise emissions from low voltage electrical and electronic equipment in the range of 9kHz to 40GHz	

6.2.2. DELL BRANDED ITE ELECTROMAGNETIC REQUIREMENTS, ASIA PACIFIC/JAPAN

In accordance with:

- VCCI rules and regulations, testing for the Japanese market must be performed by a VCCI accredited EMC laboratory.
- CCC rules and regulations, testing for the Mainland Chinese market must be performed by a CCC accredited EMC laboratory.
- MIC rules and regulations, a MIC accredited EMC laboratory located in South Korea must perform testing for the South Korean market.
- memorandum of understanding, a NVLAP or A2LA accredited laboratory must perform testing for the Australian/New Zealand markets.
- BSMI rules and regulations, testing for the Taiwan market must be performed by a BSMI accredited EMC laboratory

IBU	Reference and Title of Standard	Regulatory Mark
Japan	• Voluntary Control Council for Interference by Information Technology Equipment -- V-1 through V-7 (CISPR-22 Emissions @ 100VAC)	VCCI
Australia	• Australian Communications Authority -- AS/NZ S3548:1995	C-Tick or RCM
South Korea	• Korean Bureau of Standards (CISPR-22 Emissions), Immunity Jan. 1, 2000	MIC
Taiwan	• Bureau of Standards, Metrology and Inspection -- CNS-13438 (CISPR -22 Emissions)	BSMI
China	• State Administration of Import and Export Commodity -- GB 9254-88 / GB 6113	CCC
	TCO 95 – Near field VLF electric and magnetic emissions	

6.2.3. DELL BRANDED ITE ELECTROMAGNETIC REQUIREMENTS, EUROPEAN COMMUNITY

IBU	Reference and Title of Standard	Regulatory Mark
European Union	• Requires compliance to the following EU Reference EMC standards	CE

EU Reference	Title of Standard	International Reference	Must Comply
EN 55022:1987 Amendment A1:1995 Amendment A2:1997	Limits and methods of measurement of radio interference characteristics of information technology equipment	CISPR 22:1993 CISPR 22:1993/A1:1995 CISPR 22:1993/A2:1996 (Modified)	Dec 31, 1998
EN 55024:1998	Information technology equipment – Immunity characteristics – Limits and methods of measurement	CISPR 24:1997	Jul 1, 2001
EN 61000-3-2:1995 Amendment A13:1997	Electromagnetic compatibility (EMC) – Part 3: Limits – Section 2: Limits for harmonic current emissions (Equipment input current up to and including 16 A per phase)	IEC 61000-3-2:1995	Jan 1, 2001
EN 61000-3-3:1995	Electromagnetic Compatibility (EMC) – Part 3: Limits – Section 3: Limitation of voltage fluctuations and flicker in low-voltage supply systems for equipment with rated current up to and including 16A	IEC 61000-3-3:1997	Jan 1, 2001
EN 61000-4-2	Electromagnetic Compatibility (EMC) – Part 4: -- Section 2: Electrostatic discharge immunity test	IEC 1000-4-2	Jul 1, 2001
EN 61000-4-3	Electromagnetic Compatibility (EMC) – Part 4: -- Section 3: Radiated, radio-frequency electromagnetic field, immunity test	IEC 1000-4-3	Jul 1, 2001
EN 61000-4-4	Electromagnetic Compatibility (EMC) – Part 4: -- Section 4: Electrical fast transient/burst immunity test	IEC 1000-4-4	Jul 1, 2001
EN 61000-4-5	Electromagnetic Compatibility (EMC) – Part 4: -- Section 5: Surge Immunity Test	IEC 1000-4-5	Jul 1, 2001
EN 61000-4-6	Electromagnetic Compatibility (EMC) – Part 4: -- Section 6: Conducted disturbances induced by radio-frequency fields – immunity test	IEC 1000-4-6	Jul 1, 2001
EN 61000-4-8	Electromagnetic Compatibility (EMC) – Part 4: -- Section 8: Power-frequency magnetic field immunity test	IEC 1000-4-8	Jul 1, 2001
EN 61000-4-11	Electromagnetic Compatibility (EMC) – Part 4: -- Section 11: Voltage dips, short interruptions and voltage variations immunity test	IEC 1000-4-11	Jul 1, 2001

6.2.4 DELL BRANDED ITE ELECTROMAGNETIC REQUIREMENTS FOR DELL DESIGN GOAL

Conducted Emissions – The Dell Design Goal requires that the Average measurements made have at least a 4dB margin from the legal limits.

Radiated Emissions – The Dell Design Goal requires a 2dB margin from the legal limits.

Surge Immunity – The Dell Design Goal requires the system pass up to 2.5kV for Line to Earth testing.

Electrostatic Discharge – The Dell Design Goal has placed a more stringent acceptance criteria for both Air and Contact Discharge. See table below for details and performance criteria.

EN 61000-4-2:1995	Electrostatic Discharge (ESD) Immunity	1	±	2 kV	Air Discharge	A
		2	±	4 kV	Air Discharge	A
		3	±	8 kV	Air Discharge	B
		3	±	12 kV	Air Discharge	B
		4	±	15 kV	Air Discharge	C
		1	±	2 kV	Contact Discharge	A
		2	±	4 kV	Contact Discharge	B
		3	±	6 kV	Contact Discharge	B
		4	±	8 kV	Contact Discharge	C
		1	±	2 kV	Horizontal Coupling Plane	A
		2	±	4 kV	Horizontal Coupling Plane	B
		3	±	6 kV	Horizontal Coupling Plane	B
		4	±	8 kV	Horizontal Coupling Plane	C
		1	±	2 kV	Vertical Coupling Plane	A
		2	±	4 kV	Vertical Coupling Plane	B
		3	±	6 kV	Vertical Coupling Plane	B
		4	±	8 kV	Vertical Coupling Plane	C

A	The apparatus shall continue to operate as intended, i.e., normal unit operation, and no degradation of performance
B	The apparatus shall continue to operate as intended after completion of the test. However, during the test, some degradation of performance is allowed as long as there is no data loss or operator intervention to restore apparatus function.
C	Temporary loss of function is allowed to include loss of volatile memory. Operator Intervention is acceptable to restore apparatus function.

6.3. PRODUCT SAFETY REQUIREMENTS

Label markings must be permanent, legible and comply with all agency requirements.

Label(s) must be affixed to the power supply showing the following:

- The Dell name/logo (using artwork provided by Dell) in large black print.
- The manufacturer's name ~~will not~~ be included on the power supply.
- Regulatory Marks
  - UL Recognized Component Mark and UL File number
  - CSA Logo or cUL Logo and File number
  - VDE or TUV BAUART mark
  - Nemko-Nordic agency mark
  - CCC mark; not a gating item, may be applied after RTS
  - BSMI code received from Dell's regulatory Department
- Model number, serial number, date code and revision level will be visible on top of the power supply.
- The total power output and the maximum load for each output.
- Shared Output levels will also be included.
- AC input rating in volts, hertz and amperes.
- Location of manufacture.
- PPID label will be type E and included according to Dell Specification 13190.
- On the same label or on a separate label the international Hazardous voltage mark must be included.

For internal power supplies, the label(s) should not cover vents or fan grills/guards. The label must be visible after installation.

7. PACKAGING AND SHIPPING

7.1. PACKAGING AND SHIPPING

All packaging must comply with Dell's Inbound Packaging Specification. Please refer to the appropriate documentation in section 1.3.

TOLERANCE:+0.1 -0.0			TOLERANCE:+0.1 -0.0			TOLERANCE:+0.1 -0.0			TOLERANCE:+0.1 -0.0		
	NC	1.1		NC	0.8X1.7		NC	0.8X1.8		NC	1.0X1.6
0.8X1.1	PUNCH	0.8X1.1	0.8X1.5	PUNCH	0.8X1.5	0.8X1.6	PUNCH	0.8X1.6	1.0X1.4	PUNCH	1.0X1.4

TOLERANCE:+0.1 -0.0			TOLERANCE:+0.1 -0.0			TOLERANCE:+0.1 -0.0			TOLERANCE:+0.1 -0.0		
	NC	1.0X1.9		NC	1.0X2.1		NC	1.0X3.2		NC	1.0X1.4
1.0X1.7	PUNCH	1.0X1.7	1.0X1.9	PUNCH	1.0X1.9	1.0X3.0	PUNCH	1.0X3.0	1X1.2	PUNCH	1X1.2

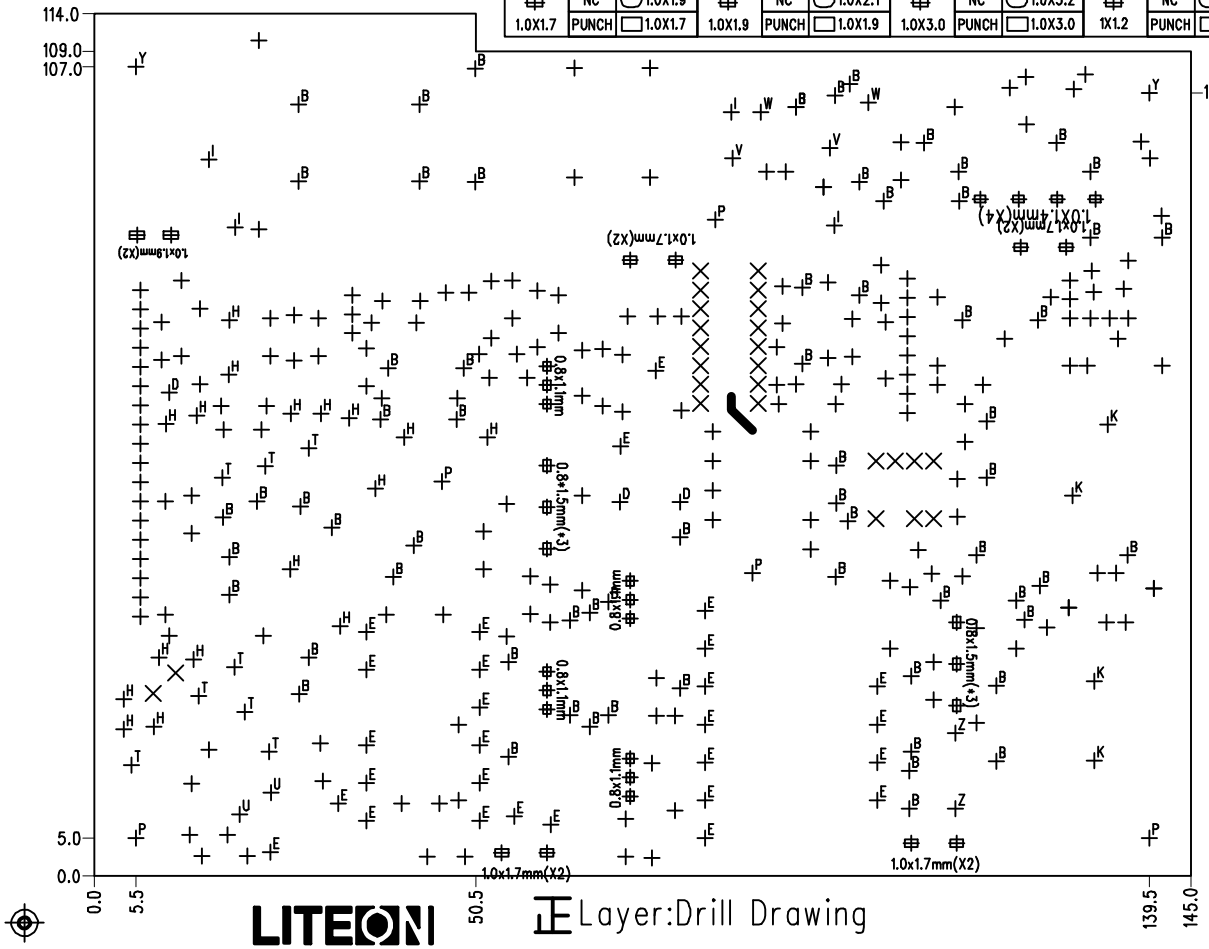

= 1.2 mm+0.1/-0

Hole Size Tolerance:
<=1.4mm:+/- 0.08mm
>1.4mm:+/- 0.1mm

SIZE	QTY	SYM	PLTD
1	238	+	PLTD
0.8	25	×	PLTD
1.2	66	B	PLTD
1.4	3	D	PLTD
1.5	28	E	PLTD
1.9	17	H	PLTD
1.9	4	I	NPLTD
2	4	K	PLTD
3	5	P	NPLTD
3.2	8	T	PLTD
1.8	2	U	PLTD
1.2	2	V	NPLTD
1	2	W	NPLTD
3.5	2	Y	NPLTD
0.9	2	Z	PLTD

LITEON

Layer:Drill Drawing

52512DSMA.PCB 01/28/2003 No:S356

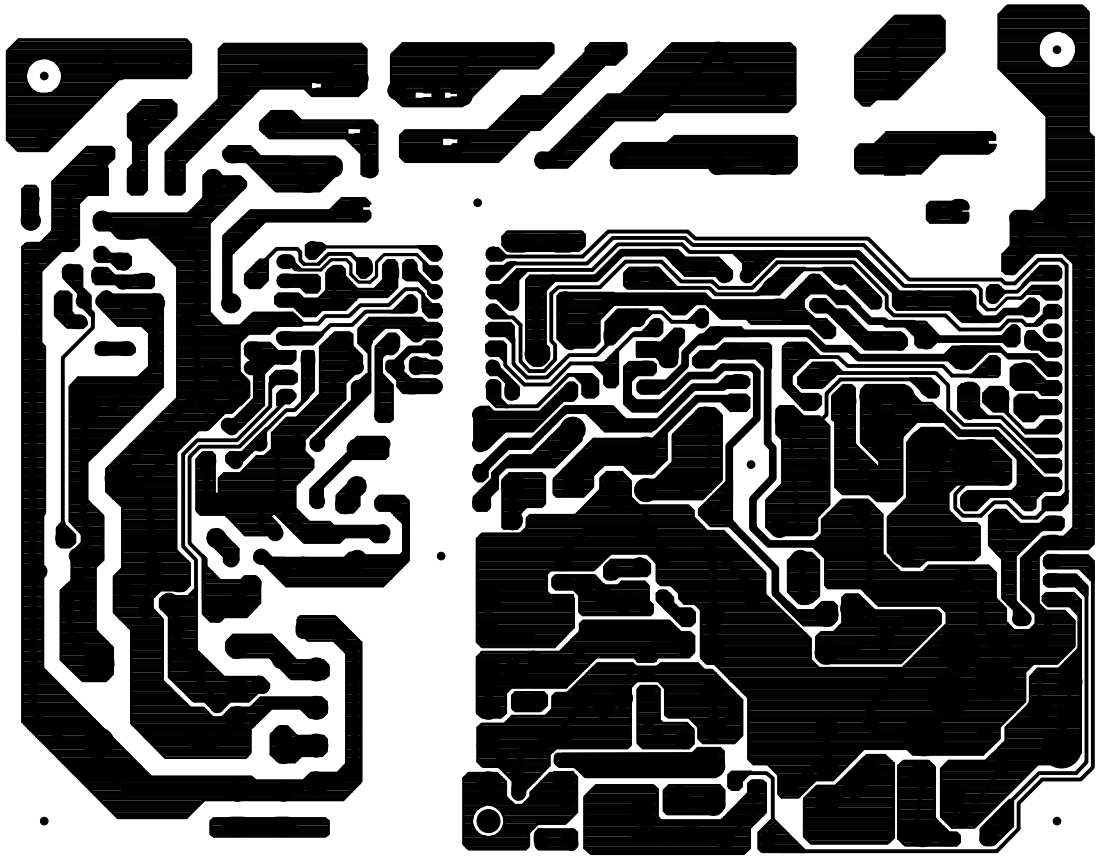

LITEON

Layer:Bottom Side

5251ZDSMA.PCB 01/28/2003 No:5356

LITEON

Layer:Solder Mask Bottom

5251ZDSMA.PCB 01/28/2003 No:5356

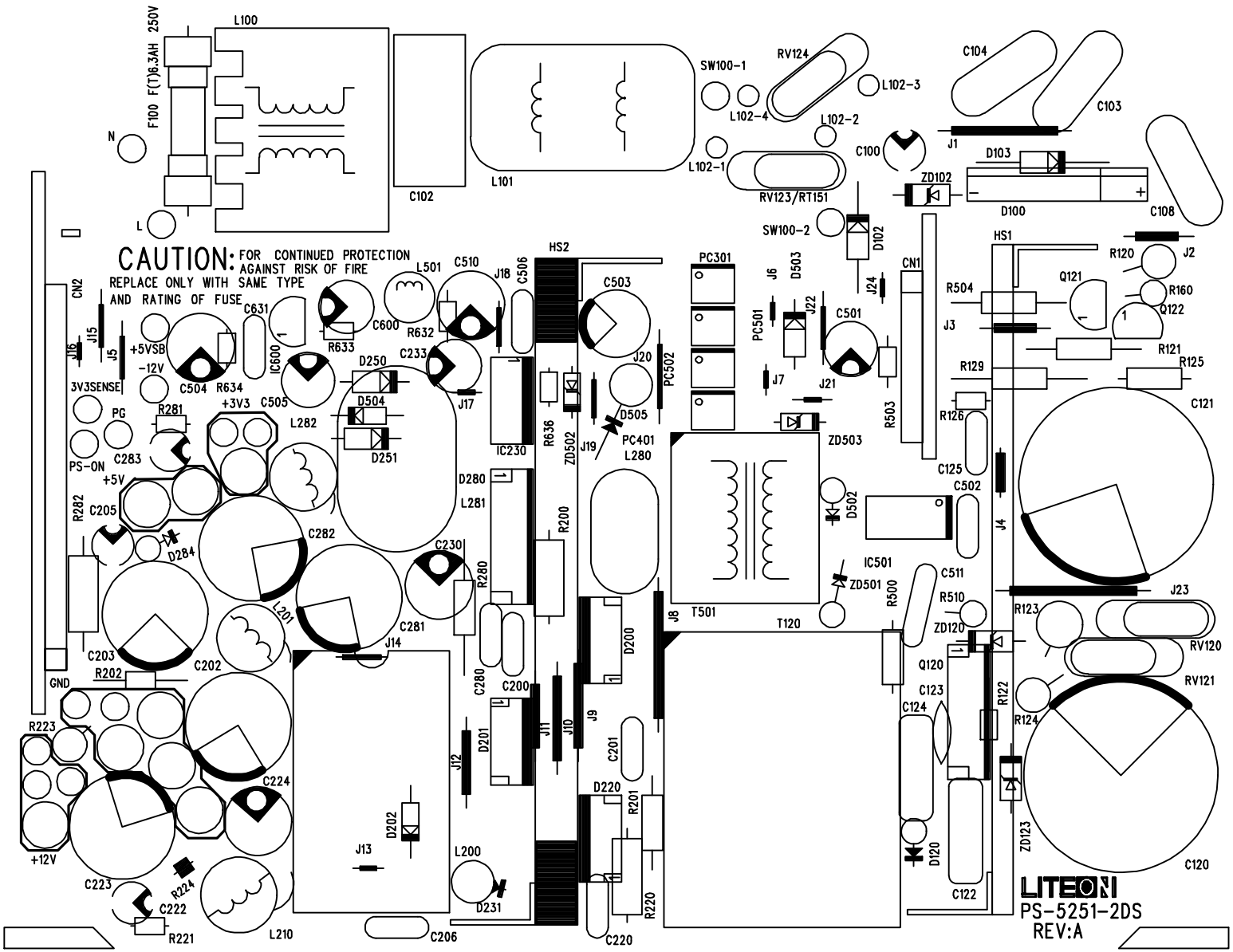

LITEON

Layer:Silkscreen Top

52512DSMA.PCB 01/28/2003 No:S356

LITEON

MATERIAL: FR-1 or CEM1
THICKNESS: 1.6mm±0.15mm
V-CUT(DEPTH="B"):0.8mm+0.1/-0.2
PCB SIZE:165*228
TOLERANCE: ±0.2
COPPER THICKNESS: 2OZ
1 LAYER
DESIGNER: VICKY WU
MODEL: PS-5251-2DS
FILE NAME:PS-5251-2DS-MB-0A
DATE:2003/01/17
UNIT:mm
REV.: 0A

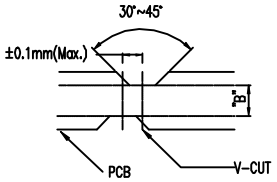

TOP VIEW

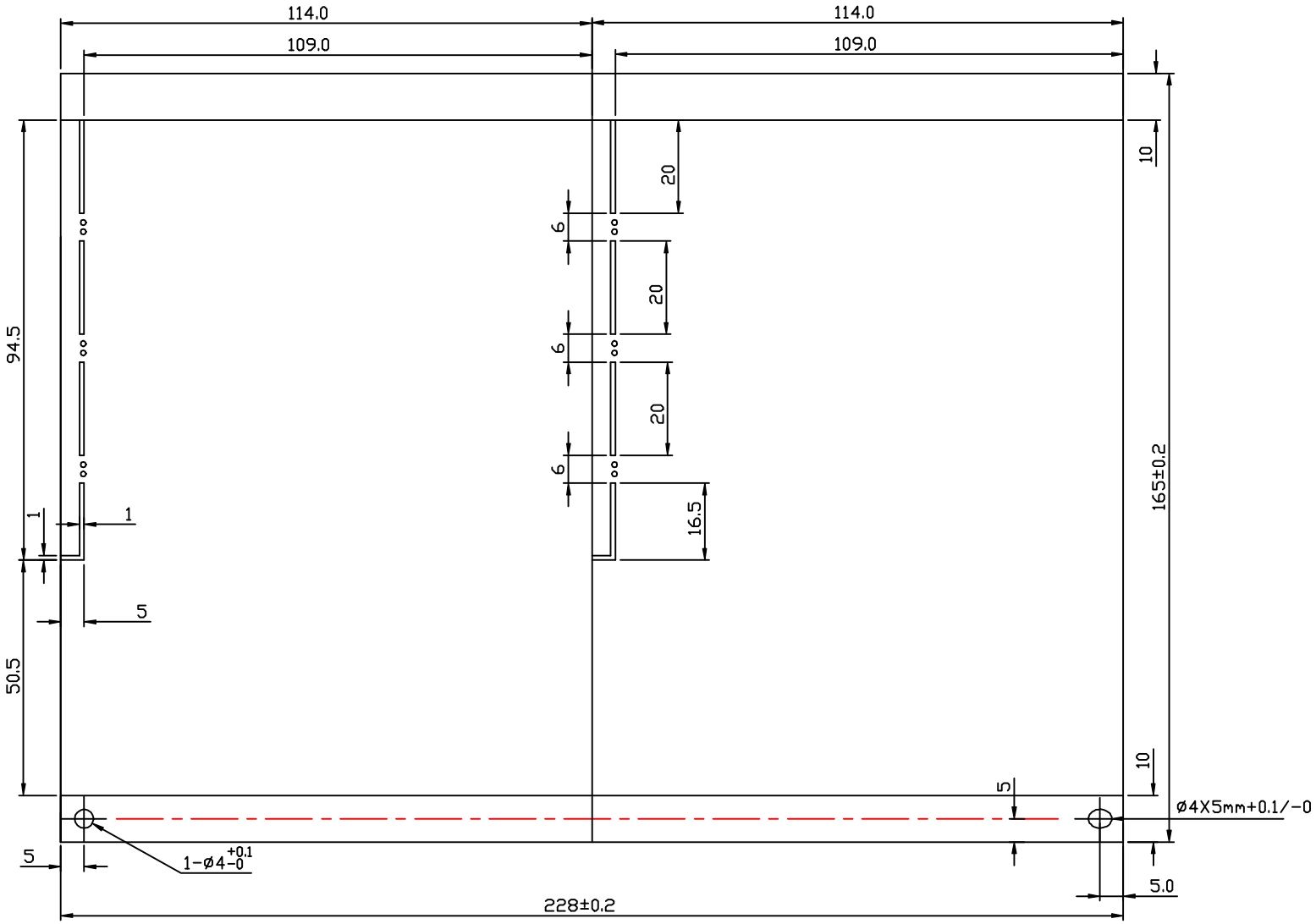

Layer:Drill Drawing

5022-2DSA.PCB NO:S357
DATE:01/28/2003

TOLERANCE:+0.1 -0.0

0.9X1.7	NC	0.9X1.9
	PUNCH	0.9X1.7

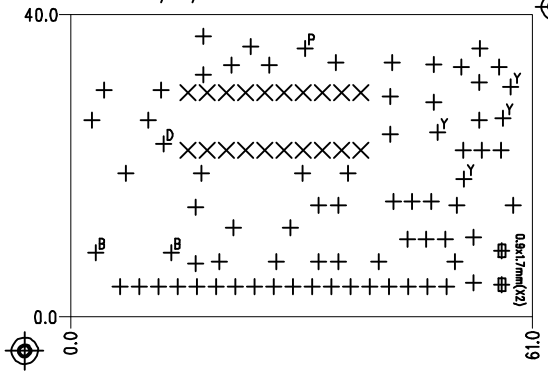

SIZE	QTY	SYM	PLTD
1	69	+	PLTD
0.8	20	×	PLTD
1.2	2	B	PLTD
1.4	1	D	NPLTD
3	1	P	NPLTD
1.2	4	Y	NPLTD

Layer:Bottom Side

5022-2DSA.PCB NO:S357
DATE:01/28/2003

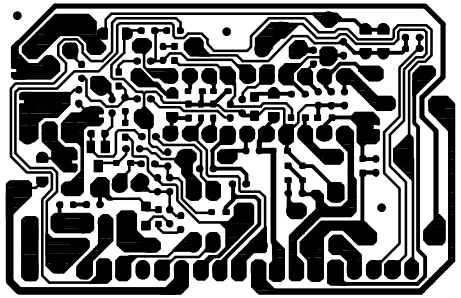

Layer:Solder Mask Bottom

5022-2DSA.PCB NO:S357
DATE:01/28/2003

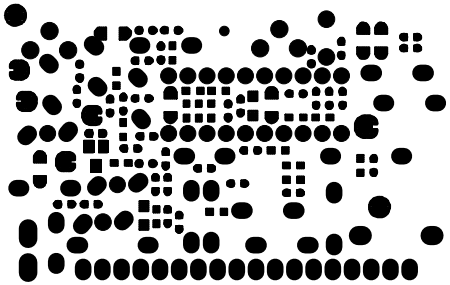

Layer:Silkscreen Top

5022-2DSA.PCB NO:S357
DATE:01/28/2003

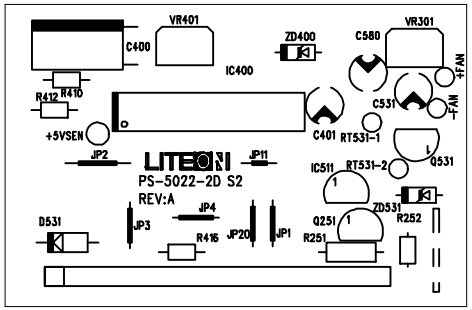

5022-2DSA.PCB NO:3357
DATE:01\28\2003

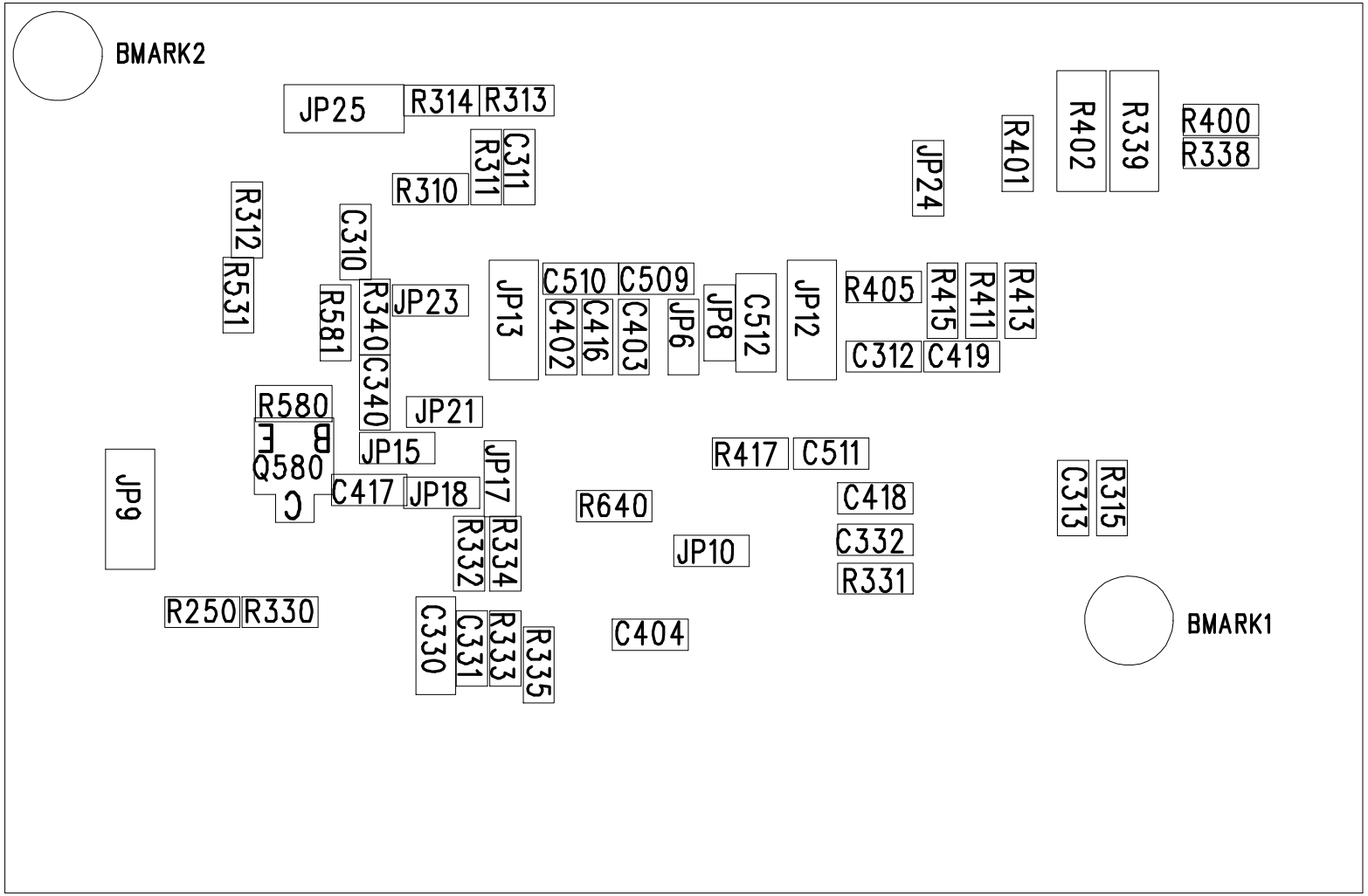

Layer:Silkscreen Top

5022-2DSA.PCB NO:S357
DATE:01/28/2003

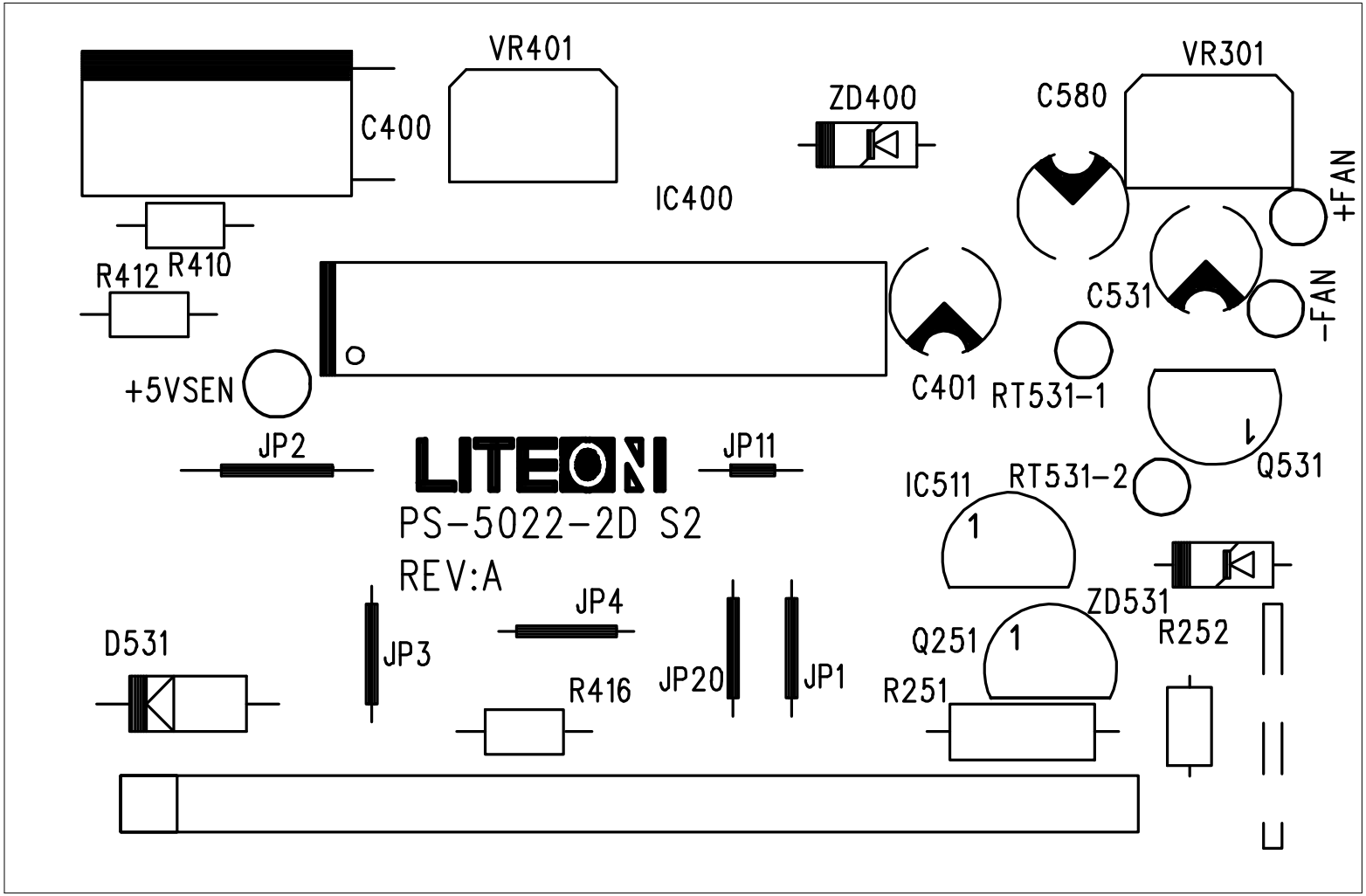

LITEON

MATERIAL: FR-1
THICKNESS: 1.6mm±0.14mm
V-CUT(DEPTH="B"):0.8mm+0.1/-0.2
PCB SIZE:183*150
TOLERANCE: ±0.2
COPPER THICKNESS: 1OZ
1 LAYER
DESIGNER: Jane Jeng
MODEL: PS-5251-2D
FILE NAME:PS-5251-2D-S2-D
DATE:2003/01/16
UNIT:mm
REV.: 0D

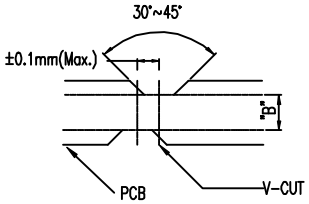

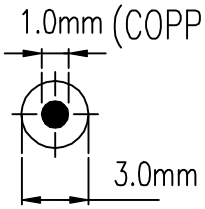

Fiducial Mark
(Solder Mask Open)

TOP VIEW

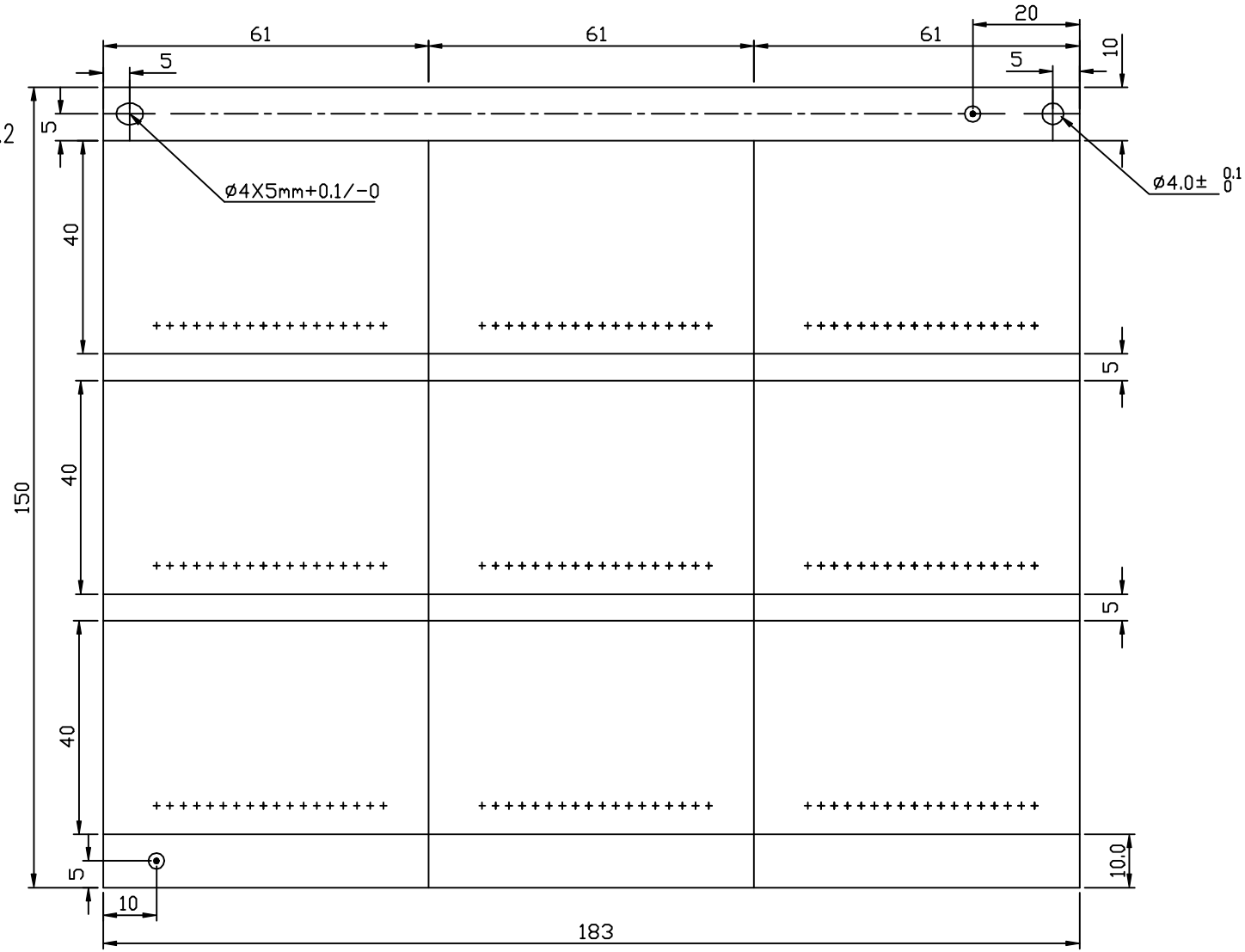

Pcgerber II V 6.0 : Wed Jan 29 16:40:57 2003 - (Untitled)

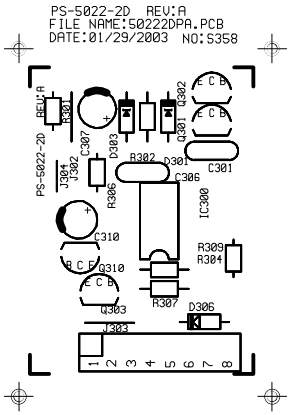

COMPONENT SLKSCR

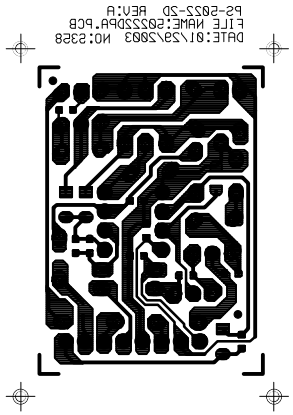

SOLDER SIDE

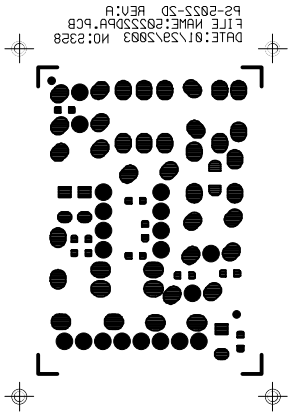

SOLDER MASK

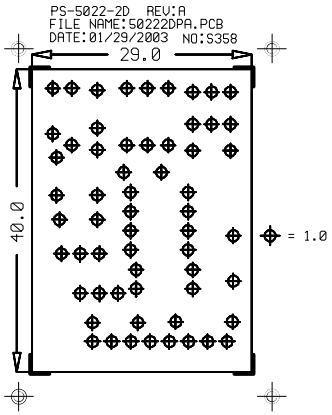

DRILL

PS-5022-2D REV:A
FILE NAME:50222DPA.PCB
DATE:01/29/2003 NO:S358

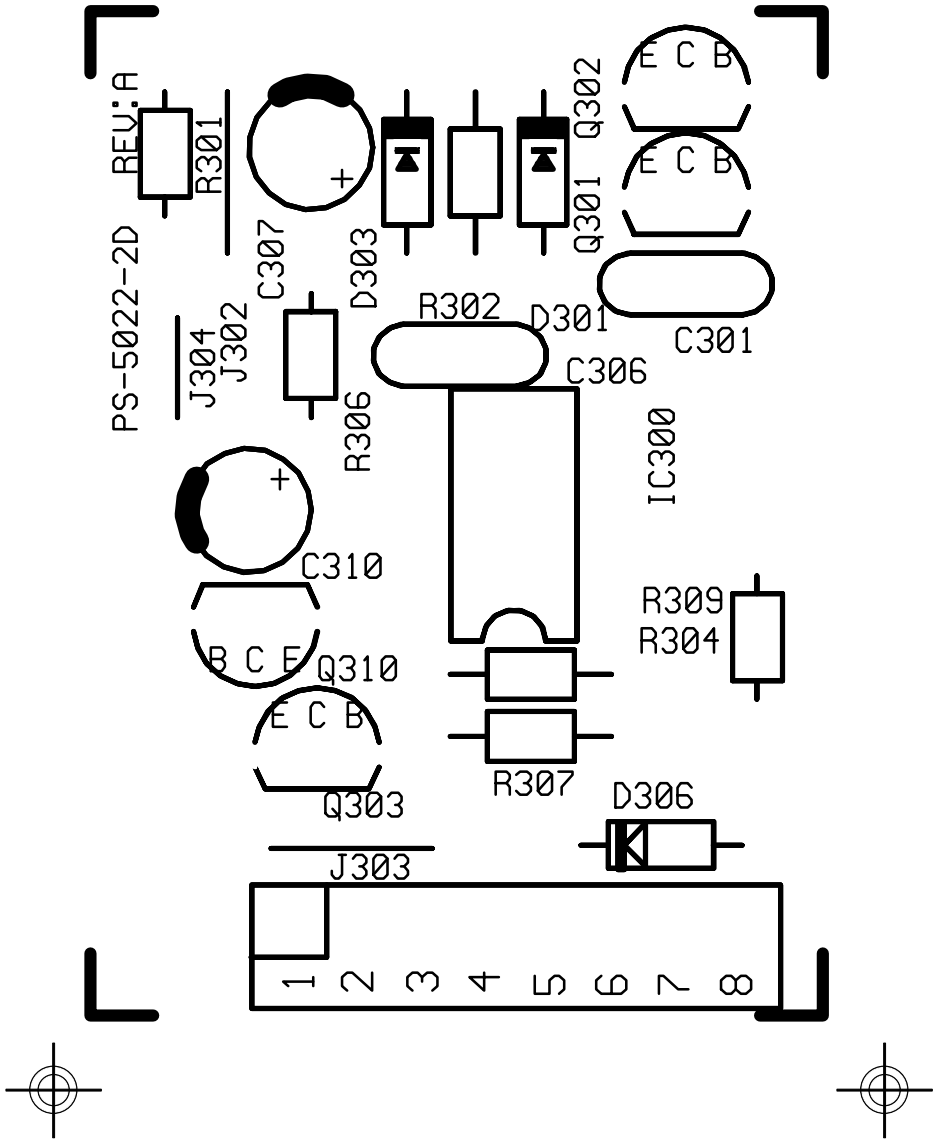

COMPONENT SLKSCR

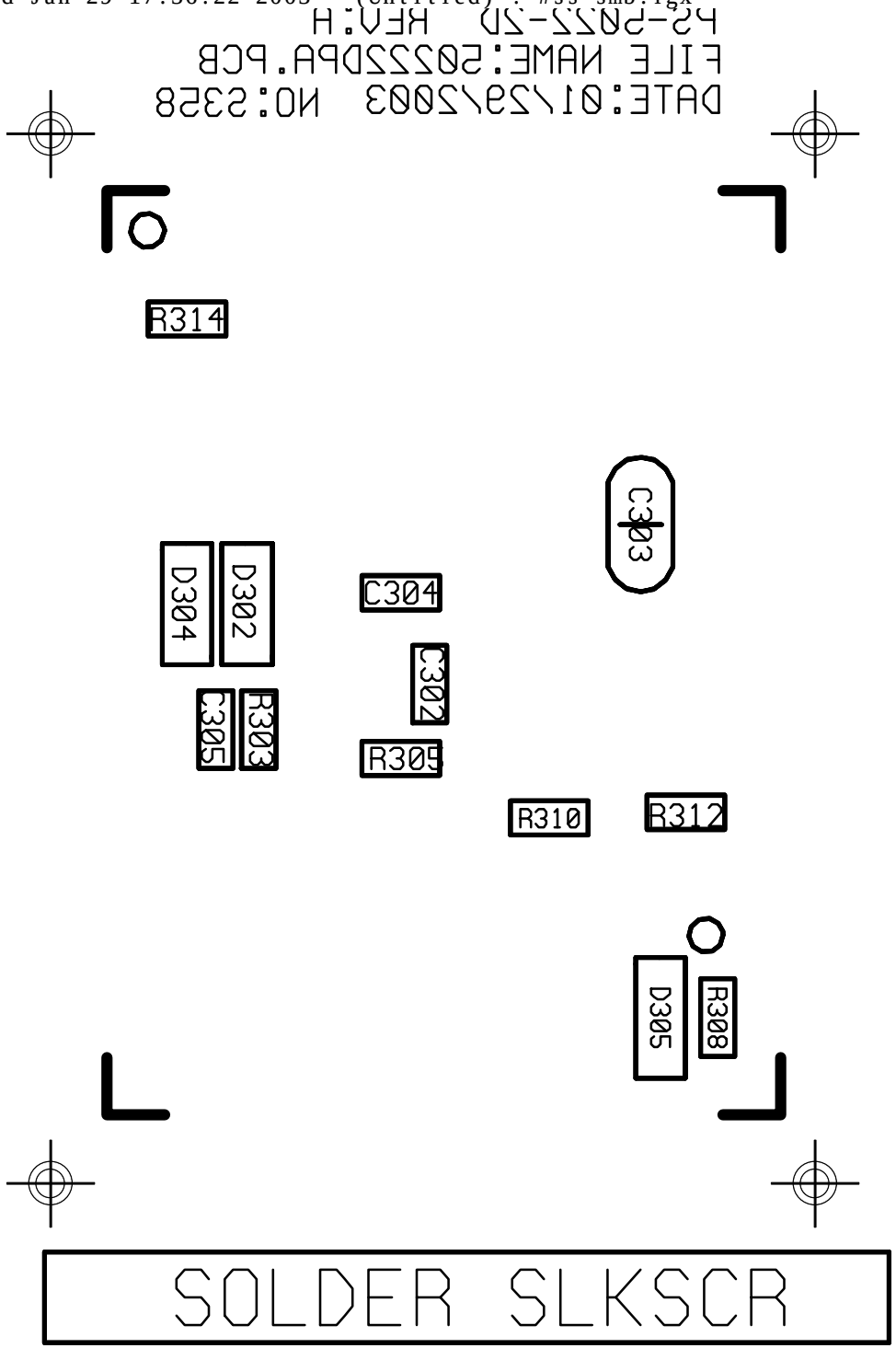
R314
C303
D304
D302
C304
C302
C305
R303
R305
R310
R312
D305
R308
SOLDER SLKSCR

LITEON

MATERIAL: FR-1
THICKNESS: 1.6mm±0.14mm
V-CUT(DEPTH="B"):0.8mm+0.1/-0.2
PCB SIZE:195*107
TOLERANCE: ±0.2
COPPER THICKNESS: 1OZ
1 LAYER
DESIGNER: Vicky Wu
MODEL: PS-5022-2D

FILE NAME:PS-5022-2D-S1-C
DATE:2003/01/29
UNIT:mm
REV.: 0C

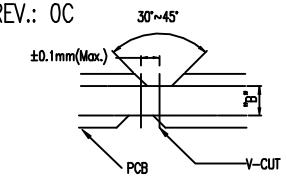

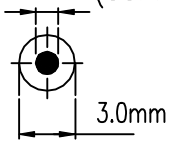

Fiducial Mark
(Solder Mask Open)

TOP VIEW

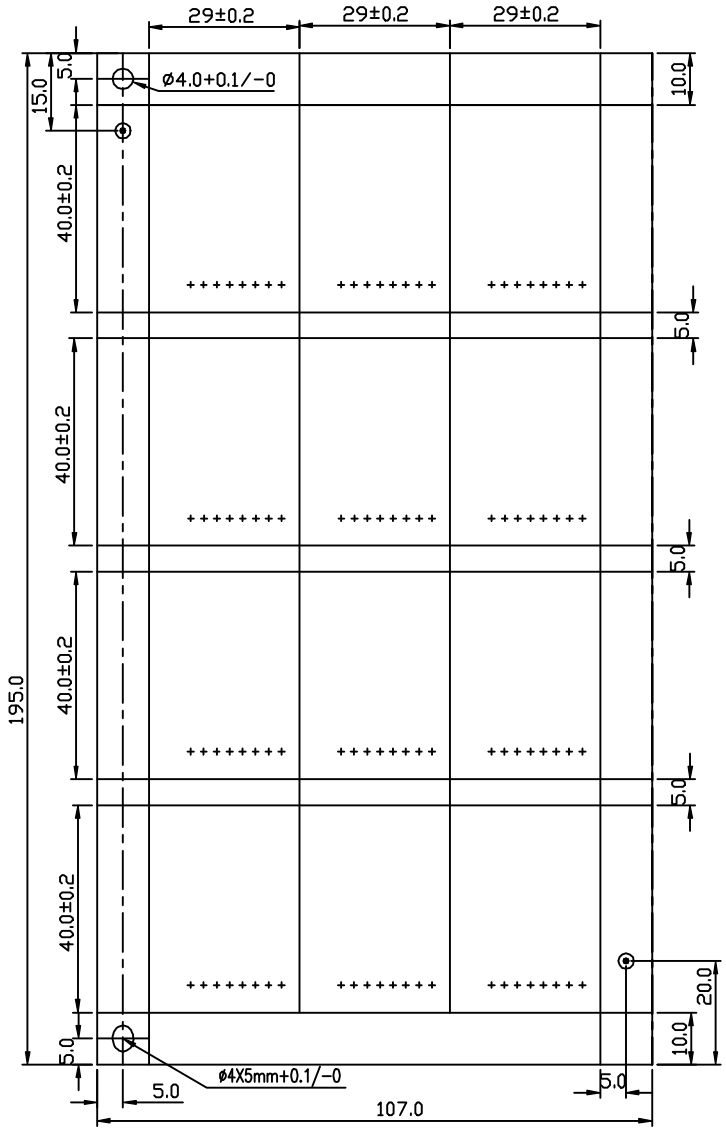

CONNE-CTOR	PIN #	FUNCTION	WIRE COLOR	WIRE TYPE	HOUSING
P1	1	+3. 3VDC	ORANGE	18AWG #1007	P1
	2	+3. 3VDC	ORANGE		
	3	COMMON	BLACK		
	4	+5VDC	RED		
	5	COMMON	BLACK		
	6	+5VCD	RED		
	7	COMMON	BLACK		
	8	POK	GRAY		
	9	+5VFP	PURPLE		
	10	+12VDC	YELLOW		
	11	+3. 3VDC[4]	ORANGE		
	12	-12VDC	BLUE		
	13	COMMON	BLACK		
	14	PS_ON	GREEN		
	15	COMMON	BLACK		
	16	COMMON	BLACK		
	17	COMMON	BLACK		
	18	----	----		
	19	+5VDC	RED		
	20	+5VDC	RED		
P2	1	COMMON	BLACK	18AWG #1007	P2
	2	COMMON	BLACK		
	3	+12VDC	YELLOW		
	4	+12VDC	YELLOW		
P3 P5 P6 P8 P9	1	+12VDC	YELLOW	18AWG #1007	P3 P5 P6 P8 P9
	2	COMMON	BLACK		
	3	COMMON	BLACK		
	4	+5VDC	RED		
P7	1	+5VDC	RED	22AWG #1007	P7
	2	COMMON	BLACK		
	3	COMMON	BLACK		
	4	+12VDC	YELLOW		
P4	1	GND	BLACK	18AWG #1007	P4
	2	GND	BLACK		
	3	------	-----		
	4	+12VDC	YELLOW		
	5	+5VDC	RED		
	6	+3.3VDC	ORANGE		

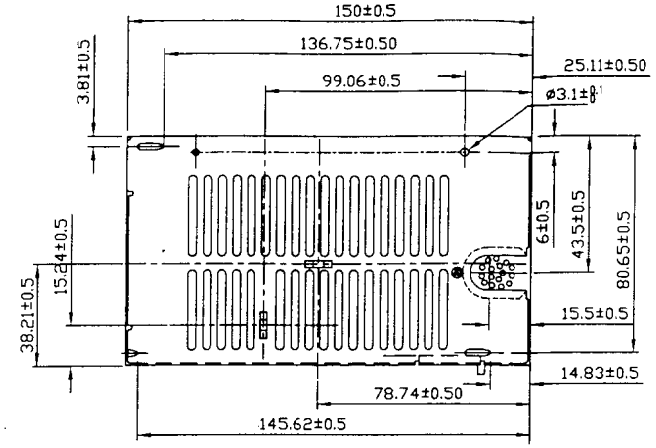

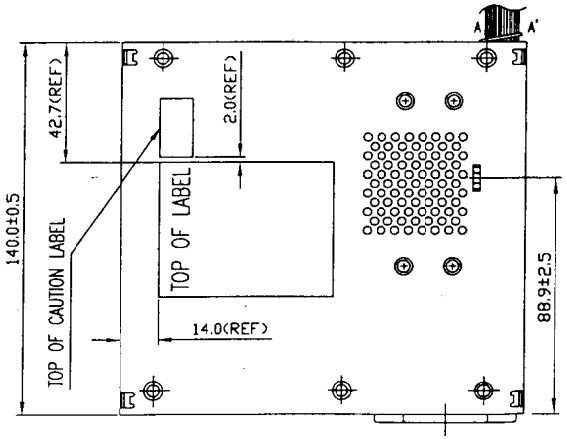

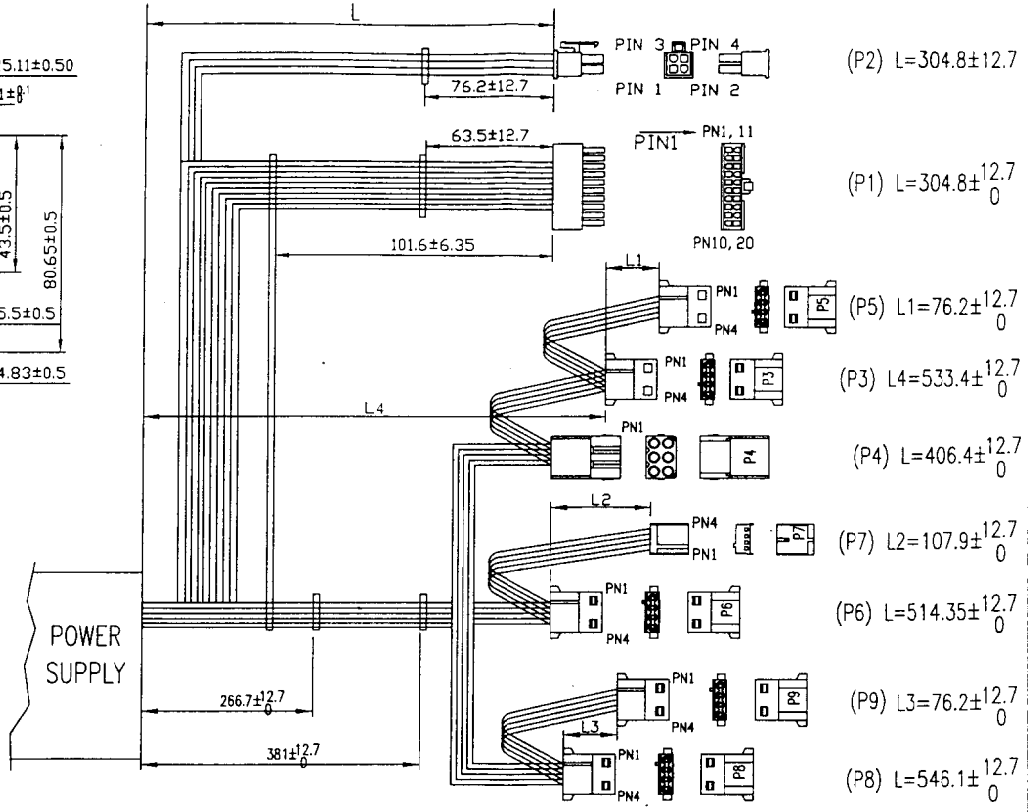

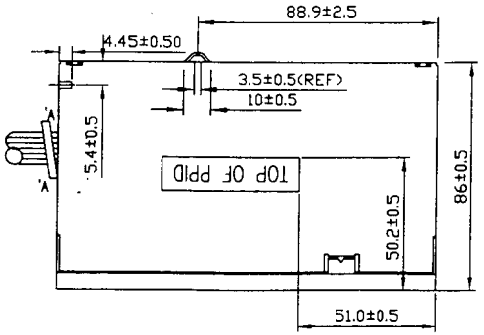

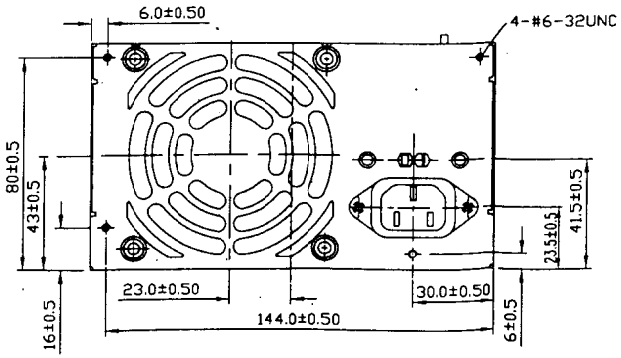

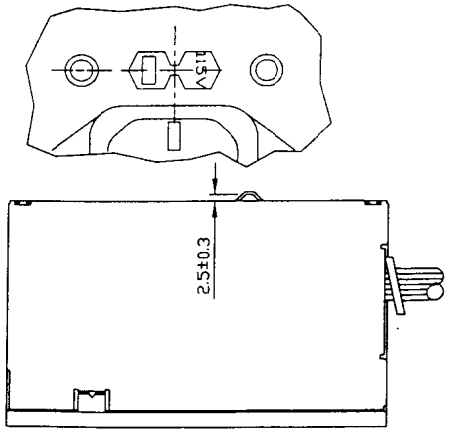

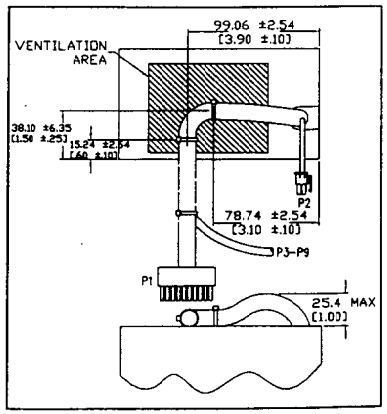

REVISION	DESCRIPTION	DATE	ZONE
A	RELEASED	12-FEB-03	

PRINTING DATE	12-FEB-03	2D FILE	OUTLINE_PS-5251-2DFS
FINAL DATE	12-FEB-03	3D FILE	
UNIT: mm	SCALE: 0.5:1		

DESIGNER	AEROSON CHEN		
CHECKER	J.A.LIN	APPROVED	

LITEON
LITE-ON ELECTRONICS, INC.

TITLE: OUTLINE DRAW.
PROJECT: PS-5251-2DFS
PART NO:
DRAWING NO: 3DSS00690
REV: A

1. ALL DIMENSIONS ARE IN MM.
2. PARTS SPECIFIED AS FOLLOW:

ITEM	PART NAME	QUANTITY
A.	CARTON	1.CARTON=8 POWER UNITS
B.	PALLET (TOP & BOTTOM)	1.PALLET= 5 LEVELS = 30 CARTONS = 240 POWER UNITS
C.	POLYESTER FILM LLDPE STRETCH FILM TYPE: CB-6B0	3 LAYERS MIN

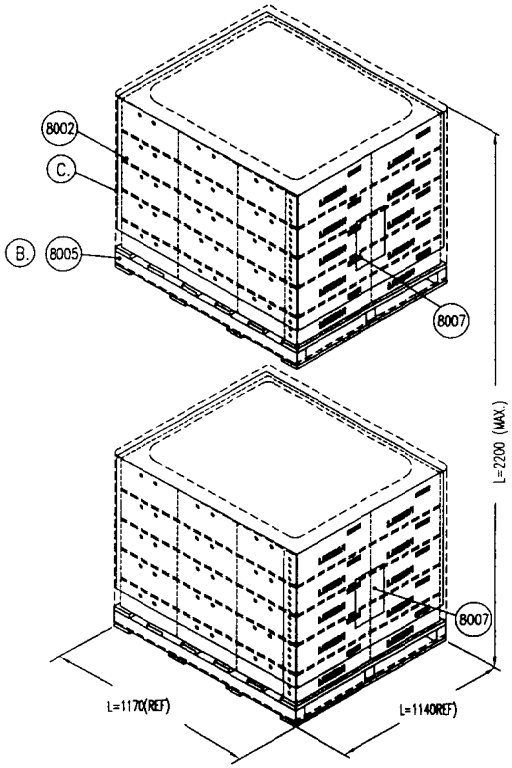

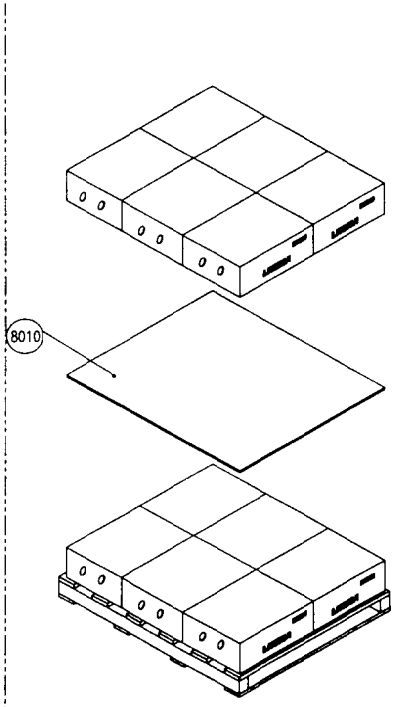

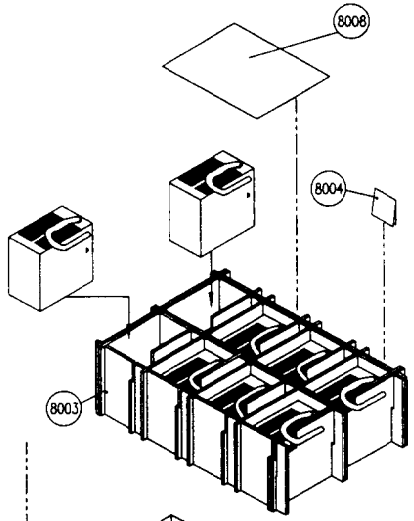

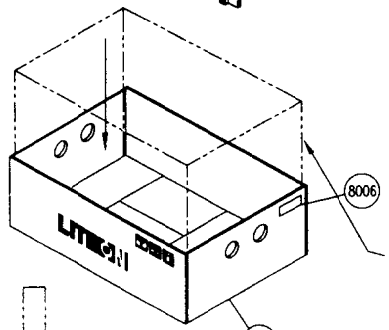

PE BAG SIZE

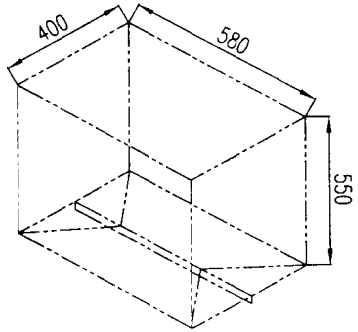

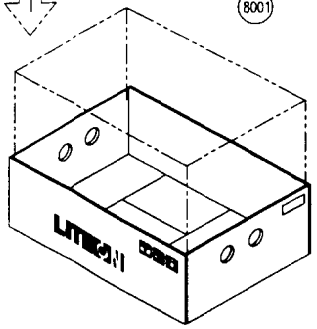

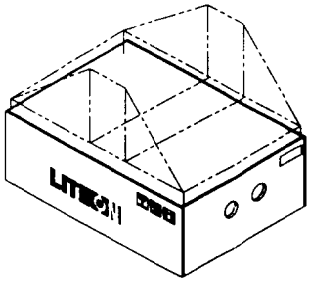

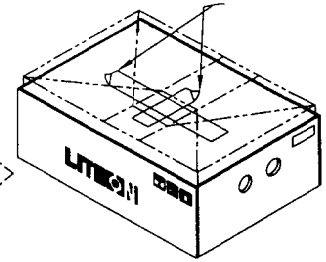

				PRINTING DATE	12-FEB-03	2D FILE	PACKING_PS-5251-2DFS	DESIGNER	AerosonChen			TITLE: PACKING DRAW.	PART NO.:
⚠	RELEASE	12-FEB-03		FINAL DATE	12-FEB-03	3D FILE		CHECKER	J.A Lin	APPROVED		PROJECT: PS-5251-2DFS	DRAWING NO.: 3PSS00646 REV.: A
REVISION	DESCRIPTION	DATE	ZONE	UNIT: mm	SCALE: F								

LITEON LITE-ON ELECTRONICS, INC.

NOTES:

1.MATERIAL: PVC
  a. ADHESIVE BASE: ACRYLIC (UL/CSA)

2. COLOR:
  a. BACKGROUND: WHITE
  b. LETTERS: [ ] BLUE [ ] GREEN [V] BLACK

3. THE HEIGHT OF LETTERS:2.0 MM, 1.5 MM , 1.0 MM
  ** LETTERING SHOULD BE CLEAR-CUT.

4. THICKNESS:
  a. SURFACE: 0.025 ±10% (REF.)
  b. ADHESIVE:0.022 MM (REF.)

5. VENDOR MUST BE CERTIFIED BY UL/CSA.

6. LOGO NAME: LITEON, ...

7. FACTORY ID: L-LITE(1) B-LITE(2) L1-LITE(U.K.)
  C-LITE(3)

**ONLY MALAYSIA PRINT THIS ITEM.

8. SERIAL NUMBER: ○○○○○○○○○

00000001-99999999

9. LEVEL ○

ACCORDING TO THE CSA STANDARD.

10. LABEL MANUFACTORY ID (EXAMPLE: CM-1). CAUTION:

11. TO SHOW THE PLACE OF PRODUCTION IN " V ".

12. SAFETY MARK AND FILE NUMBER.
  **THE FILE NUMBER OF CSA SHOULD BE CHANGED

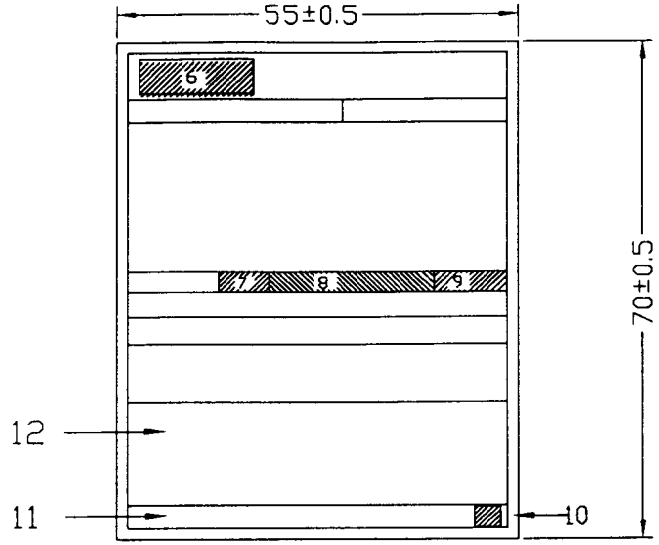

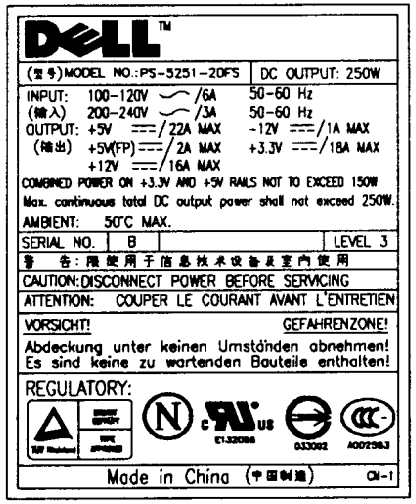

REVISION	DESCRIPTION	DATE	ZONE
A	RELEASE	12-FEB-2003	

PRINTING DATE	12-FEB-2003	2D FILE	LABEL_PS-5251-2DFS	DESIGNER	AEROSON CHEN			LITEON LITE-ON ELECTRONICS, INC.	TITLE: LBL-SPS	PART NO.: (601208) 93-M52512DL4
FINAL DATE	12-FEB-2003	3D FILE		CHECKER		APPROVED	J.A. Lin		PROJECT: PS-5251-2DFS	DRAWING NO.: 493-601208 REV.: A
UNIT: mm	SCALE:									

REVISION	DESCRIPTION	APPROVER	DATE
A	Released	Hsu Shun Lin	5/12/94

DRAWING NO.

NOTES:

1.ALL DIMENSIONS ARE IN MM.
2.MATERIAL: 0.18 MAX. OVERALL LABEL THK. WITH WHITE POLYESTER FILM, ACRYLIC ADHESIVE BACK.
3.COLOR: ALL CHARACTERS SHOUD BE BLACK.
4.LETTERING SHOULD BE CLEAR-CUT.
5.VENDOR MUST BE UL/CSA APPROVED.
6.BAR CODE SPECIFIED AS FOLLOWS:
6.-1. CODE TO BE 8 DIGITALS.
6.-2. THIS BAR CODE LABEL SHOULD BE INSPECTED WITH BAR CODE READER THAT IT HAS A RIGHT DATA.
6.-3.

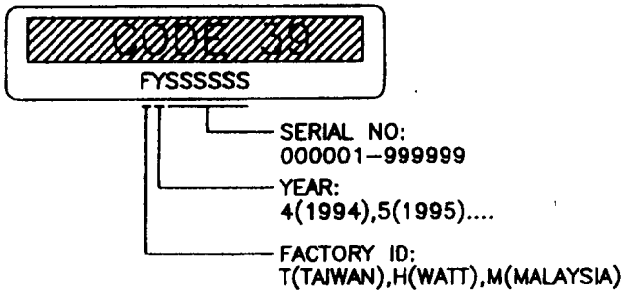

7.PART NUMBER:(1170~~70~~)93-M42213SL1.
8.REVSION: A

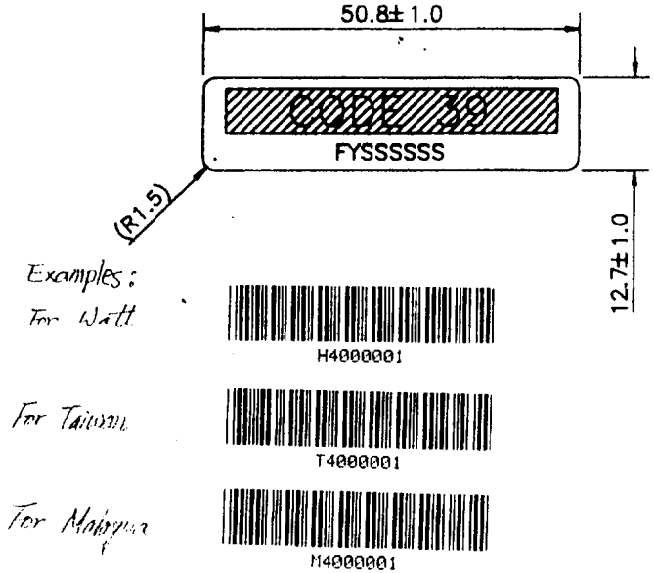

PC. NO.	NAME	MAT'L	QTY	NOTES

UNIT	SCALE	UNLESS OTHERWISE SPECIFIED USE THE FOLLOWING				DRAFTSMAN	CHECKER	COPY TO:	TAIWAN LITON ELECTRONIC CO., LTD.	TITLE LBL- SERIAL (BAR CODE)
mm	R.E.F 1=1	HEAT TREATMENT	SURFACE	TOLERANCE ON MACHINED: DIMENSION	ANGULAR	5/12/94	APPROVER	APPROVED OF ENG C.S.Lin 5/12/94		PA-4221-3A
QTY	DATE 5/12/94									DRAWING NO. BPS430373A
MATERIAL		X	X	X	X					

LITEON

REVISION	DESCRIPTION	APPROVER	DATE
A	RELEASED	HSU SHU-CHIH	04/09/96

NOTES:

1. MATERIAL:
   a. SURFACE: METALIZED POLYESTER PAPER (TR-100)
   b. LINER: ART PAPER
   c. ADHESIVE: ACRYLIC
2. THICKNESS:
   a. SURFACE: 0.075 ± 10% MM
   b. LINER: 0.17 ± 10% MM
   C. ADHESIVE: 0.026 MM
3. TEMPERATURE: RANGE: −20 ~ 100°C
4. COLOR:
   a. BACKGROUND: YELLOW
   b. LETTERS: BLACK
5. PART NUMBER: (119794)93-M415/9CL3

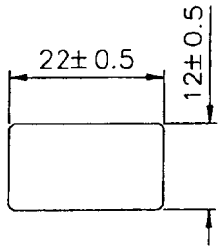

SCALE 1 : 1

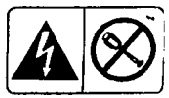

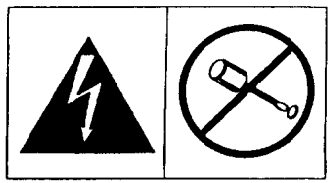

UNIT: m.m	SCALE: 1 : 1	UNLESS OTHERWISE SPECIFIED USE THE FOLLOWING			DRAFTSMAN 04/09/96 HSU SHU-CHIH	CHECKER	COPY TO:	LITEON TAIWAN LITON ELECTRONIC CO.,LTD	TITLE: LBL-CAUT PA-4151-91
Q'TY: —	DATE: 04/09/96	HEAT TREATMENT	SURFACE	TOLERANCE ON MACHINED					
MATERIAL: —		—	—	DIMENSION — / ANGULAR —	DESIGNER 04/09/96 HSU SHU-CHIH	APPROVER	APPROVED OF ENG		DRAWING NO: 493-119794A

REVISION	DESCRIPTION	APPROVER	DATE
A	RELEASED,PLEASE REFER TO THE MPS430451L	HSU SHU-CHIH	12/20/95

NOTES:

1.MATERIAL:
- a. SURFACE: SYNTHETIC PAPER
- b. LINER: ART PAPER
- c. ADHESIVE: ACRYLIC

2.THICKNESS:
- a. SURFACE: 0.055 ± 10% MM
- b. LINER: 0.03 ± 10% MM
- c. ADHESIVE: 0.022 MM

3.TEMPERATURE: RANGE: −20 ~ 100°C

4.COLOR:
- a. BACKGROUND: WHITE

5.PART NUMBER: (118390)93−M40321BC1

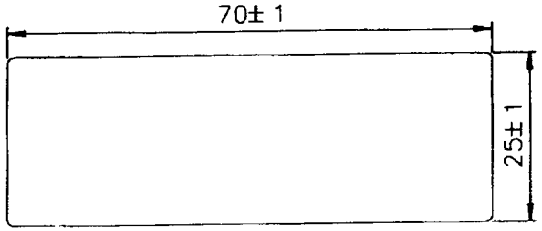

SCALE 1 : 1

UNIT: m.m	SCALE: REF	UNLESS OTHERWISE SPECIFIED USE THE FOLLOWING				DRAFTSMAN 12/20/95 HSU SHU-CHIH	CHECKER	COPY TO:	TITLE: BAR-CODE FOR ALL MODELS
Q'TY: ——	DATE: 12/20/95	HEAT TREATMENT	SURFACE	TOLERANCE ON MACHINED					
MATERIAL: ——		——	——	DIMENSION ——	ANGULAR ——	DESIGNER 12/20/95 HSU SHU-CHIH	APPROVER	APPROVED BY ENG	DRAWING NO: 493−118390A

LITEON TAIWAN LITON ELECTRONIC CO.,LTD

REVISION	DESCRIPTION	APPROVER	DATE
A	RELEASED	HSU SHU-CHIH	11/15/96

NOTES:

1.MATERIAL: ART PAPER

2.COLOR: WHITE

3.THICKNESS: 0.08 MM

4.THE MATERIAL MUST BE ADHESIVED.

5.NO OIL,DAMAGE.

6.PART NUMBER: (116090)93-M42213BC2

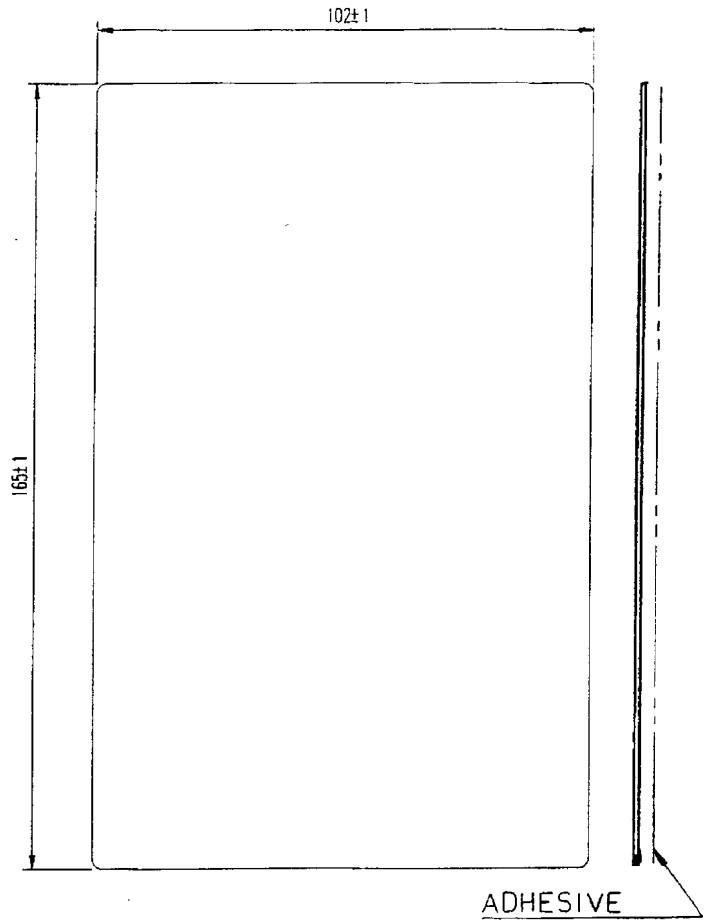

UNIT m.m	SCALE: 1 : 1	UNLESS OTHERWISE SPECIFIED USE THE FOLLOWING			DRAFTSMAN 11/15/96 HSU SHU-CHIH	CHECKER 11/16/96	COPY TO:	LITEON TAIWAN LITON ELECTRONIC CO.,LTD	TITLE: BAR CODE
Q'TY: —	DATE: 11/15/96	HEAT TREATMENT	SURFACE	TOLERANCE ON MACHINED					
MATERIAL: —		—	—	DIMENSION — / ANGULAR —	DESIGNER 11/15/96 HSU SHU-CHIH	APPROVER 11/16	APPROVED OF ENG 11/16/96		DRAWING NO: 393-116090A

NOTES:

1. MATERIAL: SIMILE PAPER.
2. THICKNESS: 0.1mm
3. THE COLOR OF LETTERING: BLACK OR BLUE
4. THE COLOR OF BACKGROUND: WHITE <NONE>.
5. LETTERING MUST BE CLEAR-CUT.
6. NO OIL.
7. PART MUNBER: (136901)53-M52512MN3

210±10

297±10

INSTALLATION INSTRUCTION MANUAL
FOR
GENERAL-USE SWITCHING POWER SUPPLY
MODEL: PS-5251-2DS, PS-5251-2DFS

1. This is a built-in component, during installation into a certain equipment the relevant requirements i.e. EN 60 950 should be maintained. Also the instructions of this unit have to follow the manufacturer's instruction manual as attached.

2. The creepage distances, clearances and thickness of insulation between primary and ground as well as between primary and secondary circuits shall comply with the current requirements of EN 60 950.

3. If you connected several output voltages together, make sure that total voltage meets SELV requirements according to EN 60 950.

4. The Power Supply unit should be operated at an ambient temperature of up 50 ℃.

5. The permissible leakage current is 3.5 mA. And it is suitable for portable appliance.

6. The current of each DC load and total DC output power of all loads should not exceed the following values:
Maximum output rating:

Output, dc	
Volts	Amps
+5 V	22 A max.
+5 V(FP)	2 A max.
+12 V	16 A max.
-12 V	1 A max.
+3.3 V	18 A max.

Combined power on +3.3 V and +5 V rails not to exceed 150 W.

Maximum continuous total DC output power shall not exceed 250 W.

7. The power cord is a disconnect device, for pluggable equipment the socket outlet shall be installed near the equipment and shall be easily accessible.

8. No AC power cord is included with this switching power supply. A certified power cord is to be used with this equipment. For a rated current up to 15 A, the minimum requirement of H03VV-F, 3G, 0.75 mm^2 (Type: SVT, AWG18,minimum temperature rating 60 ℃/75 ℃ for CSA/UL) shall be used.

9. Before connecting the input power, make sure that the select switch is in an adequate position.

REVISION	DESCRIPTION	DATE	ZONE	PRINTING DATE	12-FEB-2003
A	RELEASE	12-FEB-03		FINAL DATE	12-FEB-2003
				UNIT: mm	SCALE:
				2D FILE	MANUAL
				3D FILE	
				DESIGNER	Aeroson Chen
				CHECKER	
				APPROVED	

LITEON
LITE-ON ELECTRONICS, INC.

TITLE: Manual
PROJECT: PS-5251-2DFS
PART NO: (136901)53-M52512MN3
DRAWING NO: 353-136901
REV: A

CUSTOMER: DELL

MODEL NO.: PS_5251_2DFS

REVISION: X02

SUBJECT: EMI Report

PREPARED BY: TONY LIU

CHECKED BY:

APPROVED BY:

MODEL:PS-5251-2dfs full load

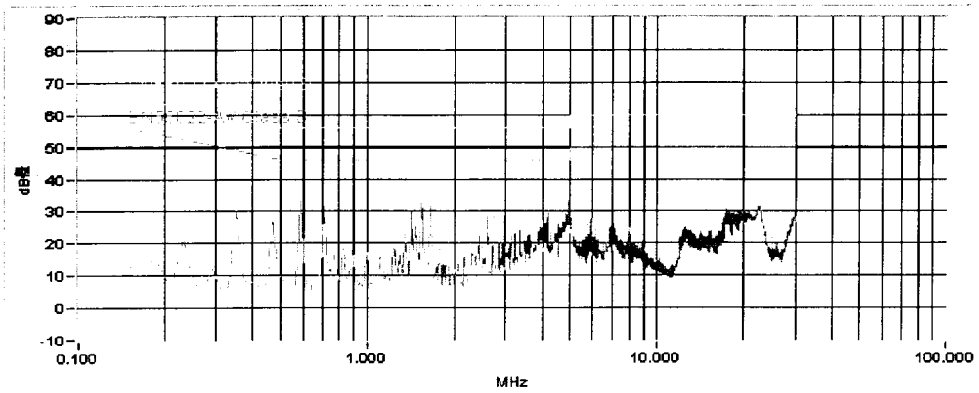

L-110-AV

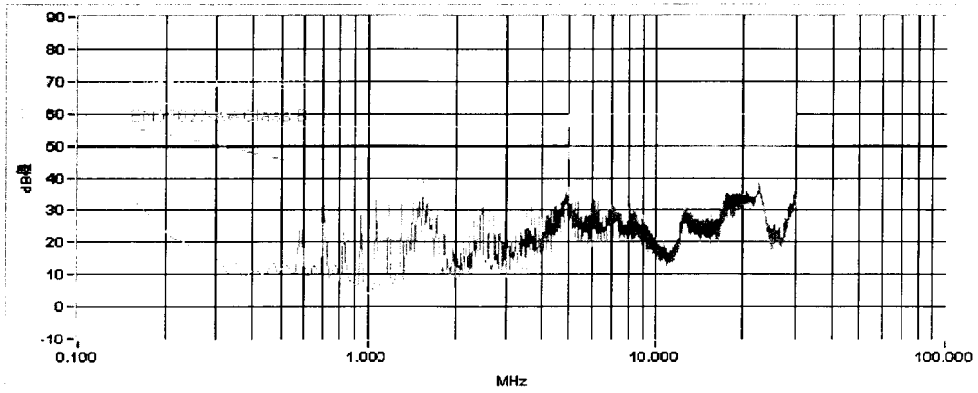

L-110-QP

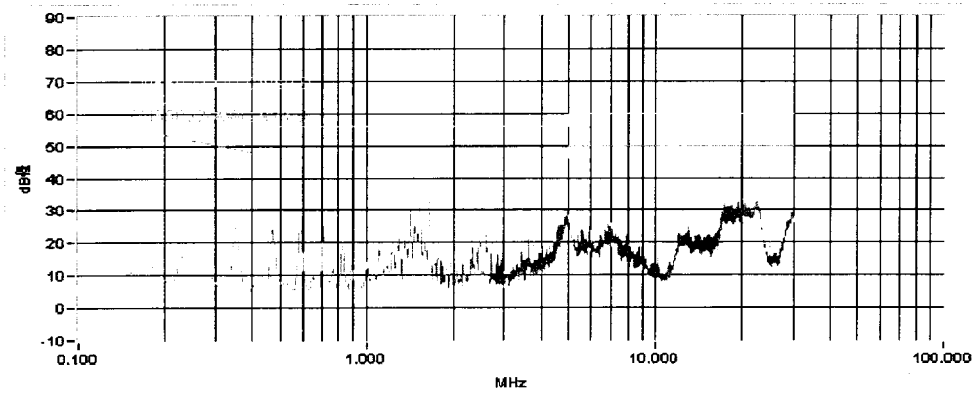

L-220-AV

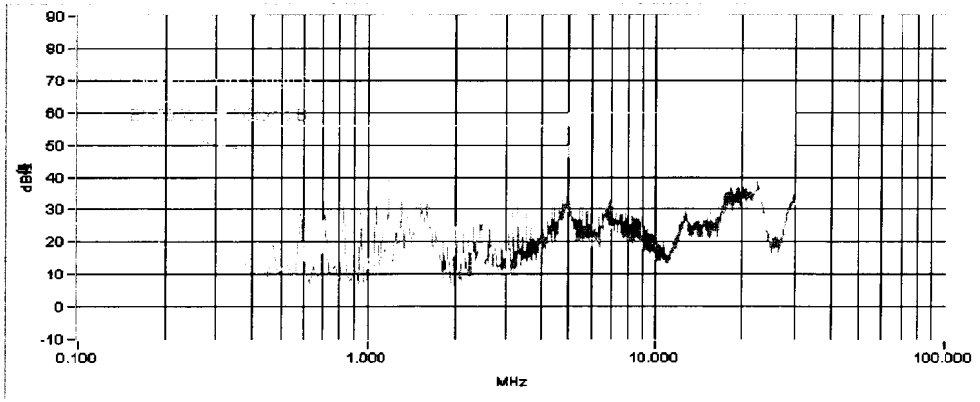

L-220-QP

CUSTOMER: DELL

MODEL NO.: PS_5251_2DFS

REVISION: X02

SUBJECT: Phase / Gain Report

PREPARED BY: TONY LIU

CHECKED BY: Joe Chen 2/3/03

APPROVED BY: Joe 3/3/03

PS-5251-2DFS

Title: PS-5251-2DFS
+5V MAX LOAD LOOP GAIN Test Conditions: Line:132V Temp:25DEG.C
Load:+5V/22A ; +12V/6.5A ; -12V/1A
+3.3V/12A ; +5VSB/2A

Filename:YC Graph of CH2 / CH1
Tested by:MAVIS CHIOU
Date:2003/1/17 Time:15:00:45

Phase Margin: 46.5 DEG Freq:3.26KHZ
Gain Margin: -9.02 dB Freq:6.47KHZ

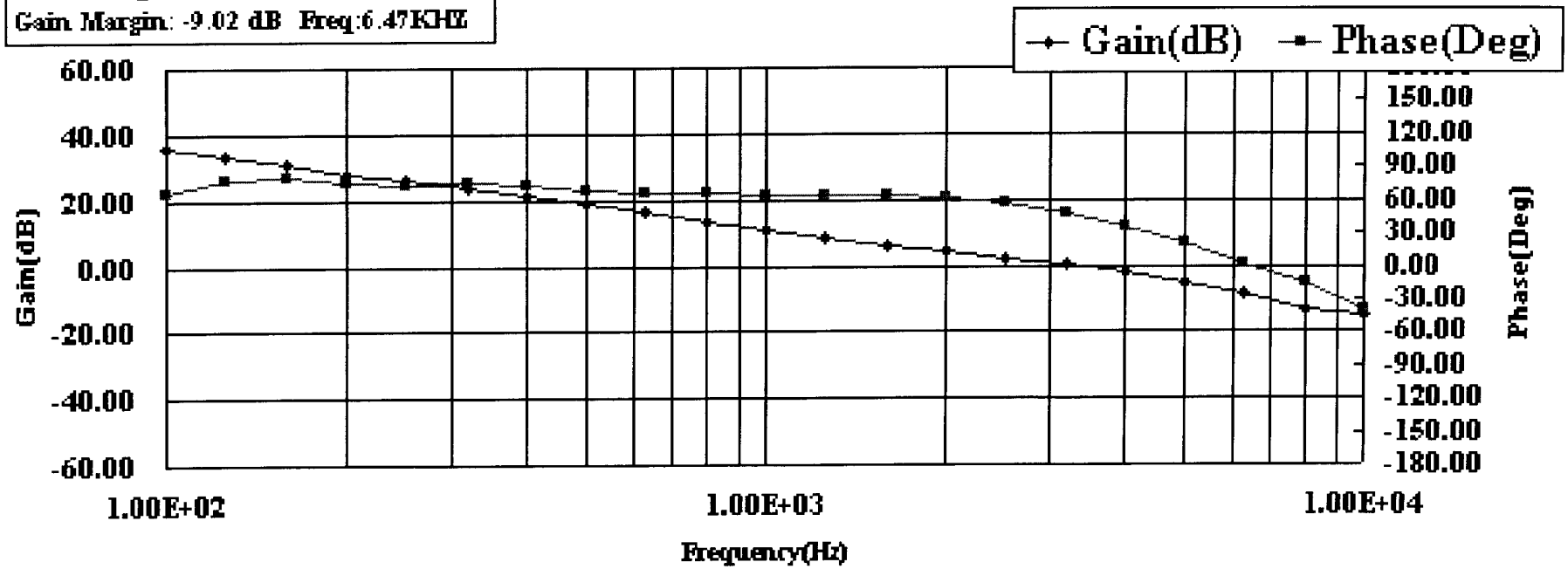

PS-5251-2DFS

Title: PS-5251-2DFS
+12V MAX LOAD LOOP GAIN Test Conditions: Line:132V Temp:25DEG.C
Load:+5V/5A ; +12V/16A ; -12V/1A
+3.3V/4A ; +5VSB/2A

Filename:YD Graph of CH2 / CH1
Tested by:MAVIS CHIOU
Date:2003/1/17 Time:14:57:29

Phase Margin: 65.9 DEG Freq:3.1KHZ
Gain Margin: -19.82 dB Freq:13.8KHZ

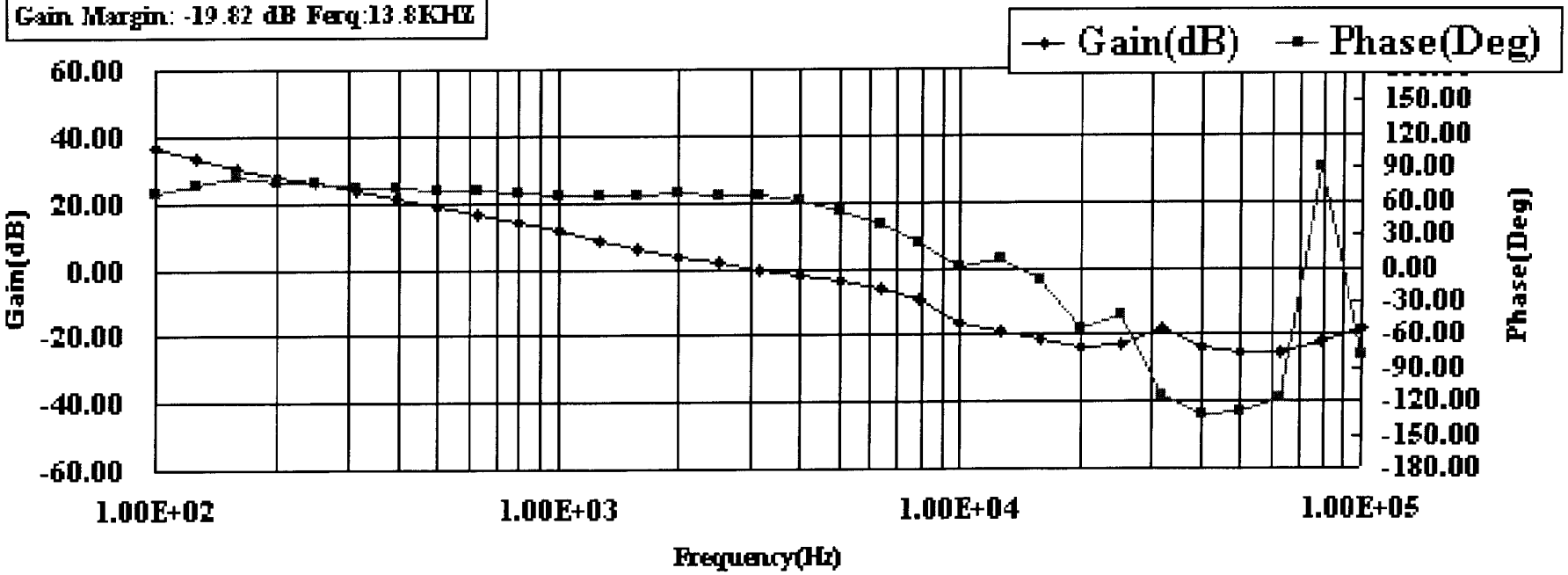

PS-5251-2DFS

Title: PS-5251-2DFS
+5V,+12V MIN LOAD LOOP GAIN Test Conditions: Line:90V Temp:25DEG.C
Load:+5V/1A ; OTHERS/0A

Filename:ZA Graph of CH2 / CH1
Tested by:MAVIS CHIOU
Date:2003/1/17 Time:14:38:45

Phase Margin: 55.6 DEG FREQ: 1.12KHz
Gain Margin: -25.01dB FREQ: 6.95KHz

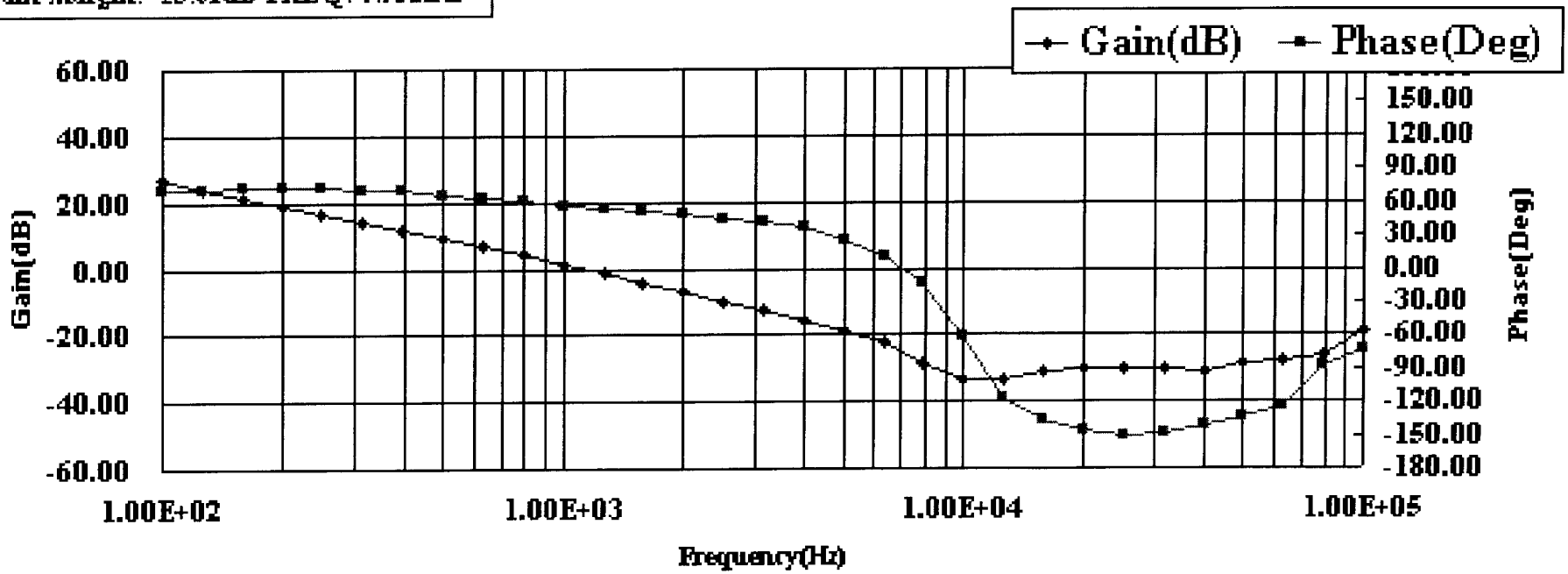

PS-5251-2DFS

Title: PS-5251-2DFS
+3.3V LOOP GAIN MAX LOAD Test Conditions: Line:132V Temp:25DEG.C
Load:+5V/18.1A ; +12V/6.5A ;
-12V/1A ; +3.3V/18A ; +5VSB/2A

Filename:ZL Graph of CH2 / CH1
Tested by:MAVIS CHIOU
Date:2003/1/17 Time:16:18:50

Phase Margin: 49.9 DEG FREQ :2.79KHz
Gain Margin: -17.45 dB FREQ :11.7KHz

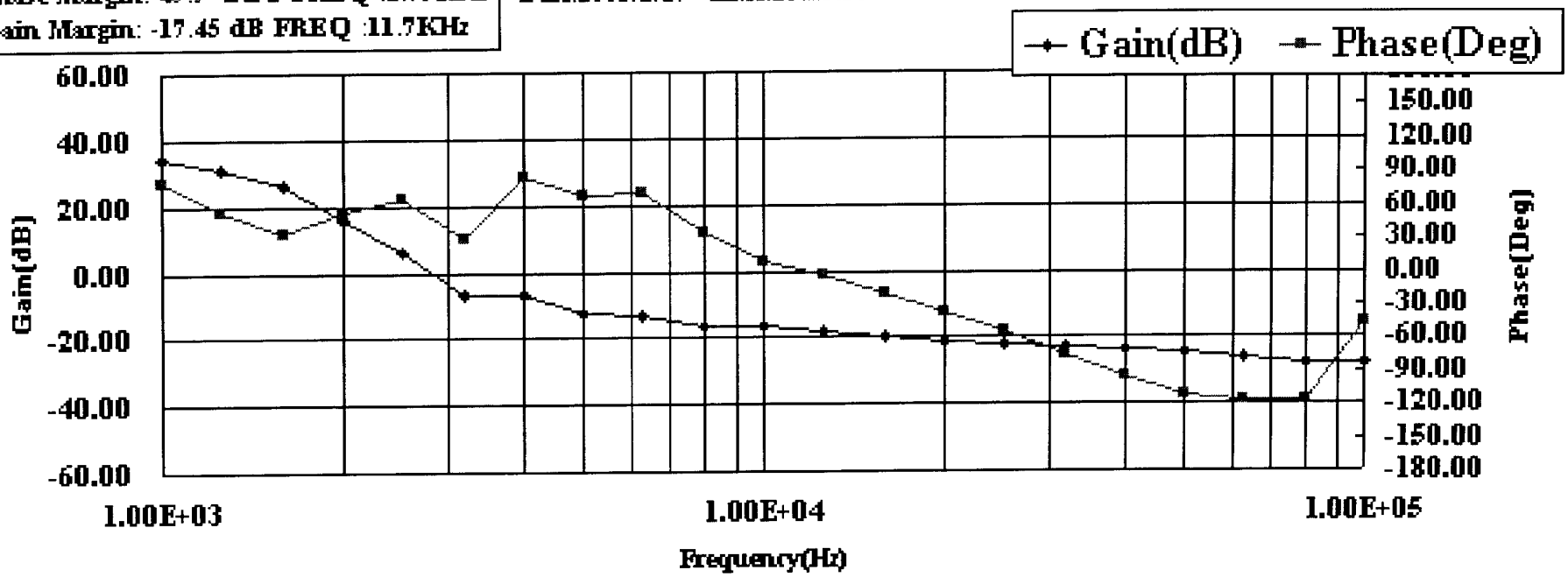

PS-5251-2DFS

Title: PS-5251-2DFS
+3.3V LOOP GAIN MIN LOAD Test Conditions: Line:132V Temp:25DEG.C
Load: +5V/1A ; OTHER 0A

Filename: T1 Graph of CH2 / CH1
Tested by: JY LIN
Date: 2003/1/17 Time: 16:30:33

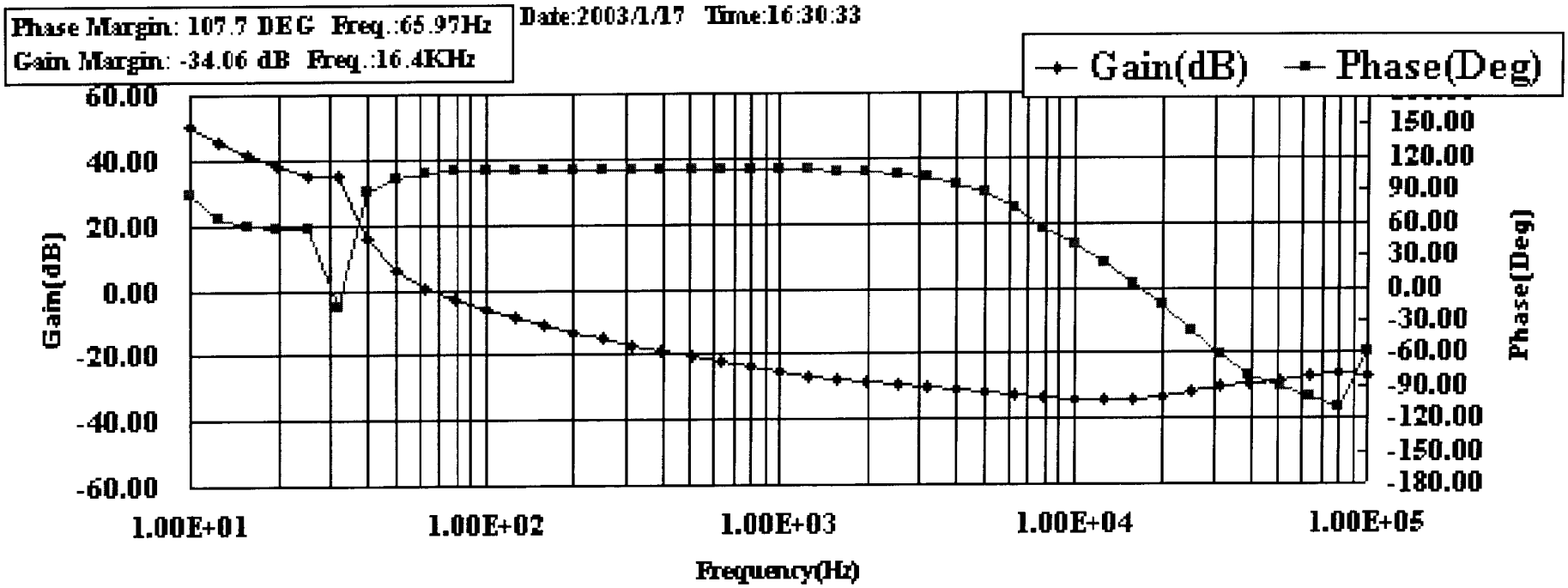

PS-5251-2DFS

Title: PS-5251-2DFS
+5V MAX LOAD LOOP GAIN Test Conditions: Line:90V Temp:25DEG.C
Load:+5V/22A ; +12V/6.5A ; -12V/1A
+3.3V/12A ; +5VSB/2A

Filename:ID Graph of CH2 / CH1
Tested by:MAVIS CHIOU
Date:2003/1/17 Time:14:44:34

Phase Margin: 61.6 DEG Freq.:3.6KHz
Gain Margin: -9.47 dB Freq.:8.48KHz

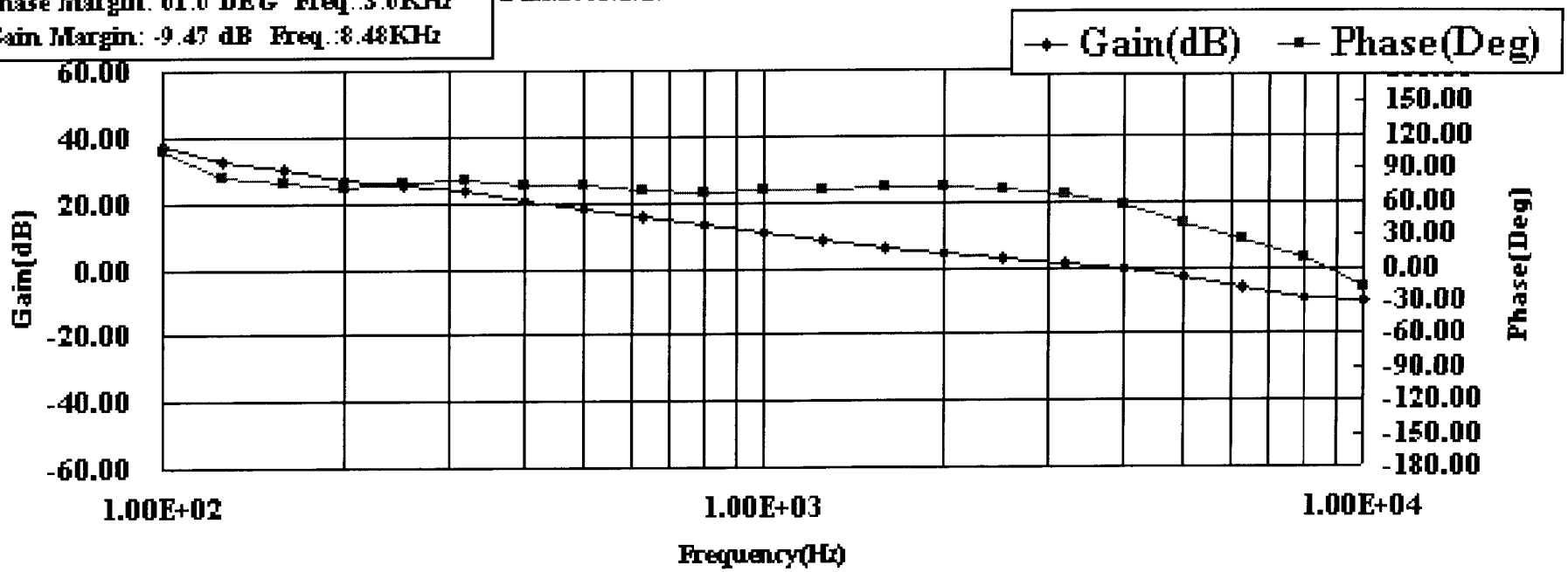

PS-5251-2DFS

Title: PS-5251-2DFS
+12V MAX LOAD LOOP GAIN Test Conditions: Line:90V Temp:25DEG.C
Load:+5V/5A ; +12V/16A ; -12V/1A
+3.3V/4A ; +5VSB/2A

Filename:EE Graph of CH2 / CH1
Tested by:MAVIS CHIOU
Date:2003/1/17 Time:14:55:18

Phase Margin: 76.4 DEG Freq.:3.09KHz
Gain Margin: -24.1 dB Freq.:15.1KHz

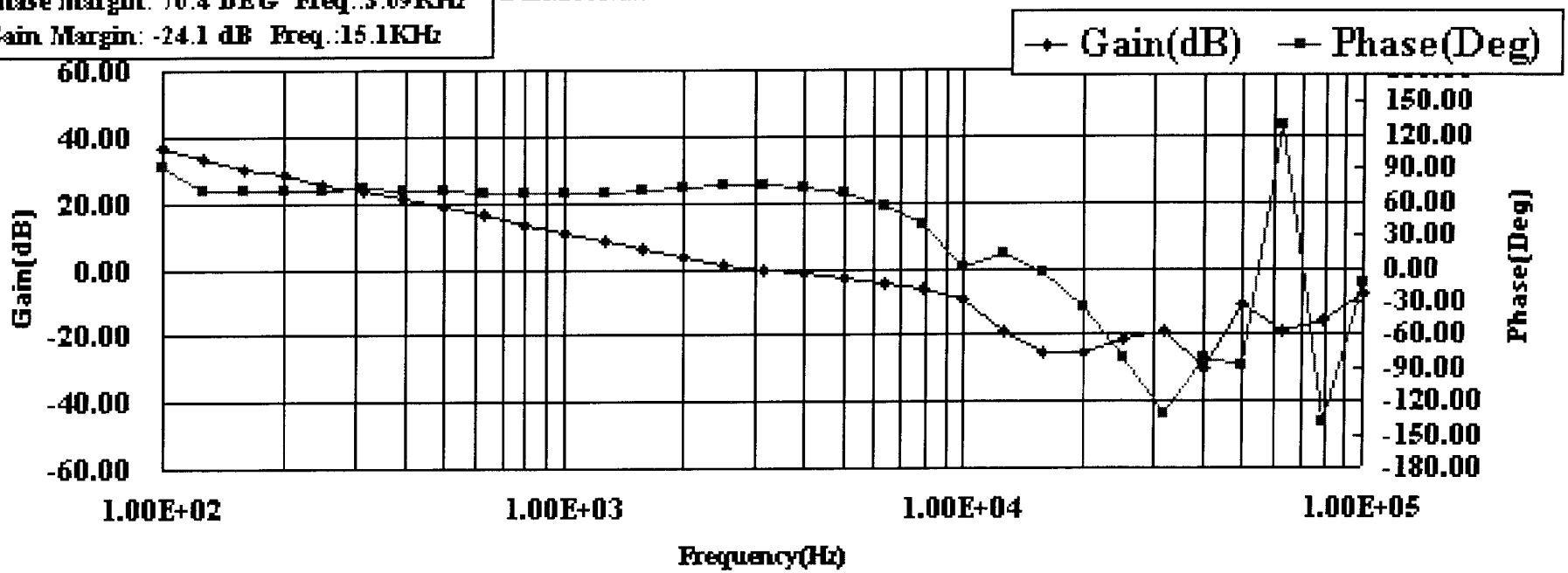

PS-5251-2DFS

Title: PS5251-2DFS
+3.3V LOOP GAIN MAX LOAD Test Conditions: Line:90V Temp:25DEG.C
Load:+5V/18.1A; +12V/6.5A; -12V/1A ;+3.3V/18A ; +5VSB/2A;

Filename:ZF Graph of CH2 / CH1
Tested by:MAVIS CHIOU
Date:2003/1/17 Time:16:15:56

Phase Margin: 55.4 DEG FREQ :2.86KHz
Gain Margin:-19.13 dB FREQ :12.3KHz

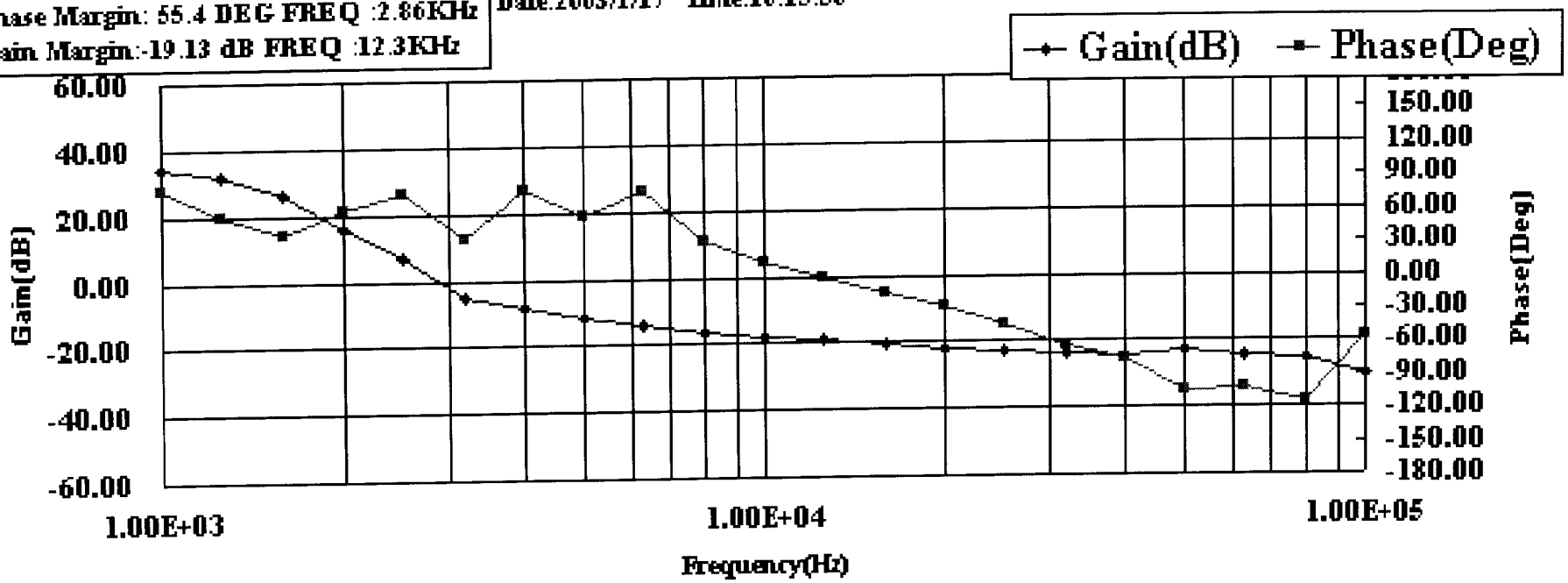

PS-5251-2DFS

Title: PS-5251-2DFS
+3.3V LOOP GAIN MIN LOAD Test Conditions: Line:90V Temp:25DEG.C
Load: +5V/1A ; OTHER 0A

Filename: T5 Graph of CH2 / CH1
Tested by: JMAVIS CHIOU
Date: 2003/1/17 Time: 16:33:07

Phase Margin: 108.3 DEG FREQ:65.9Hz
Gain Margin: -33.93 dB FREQ:16.1KHz

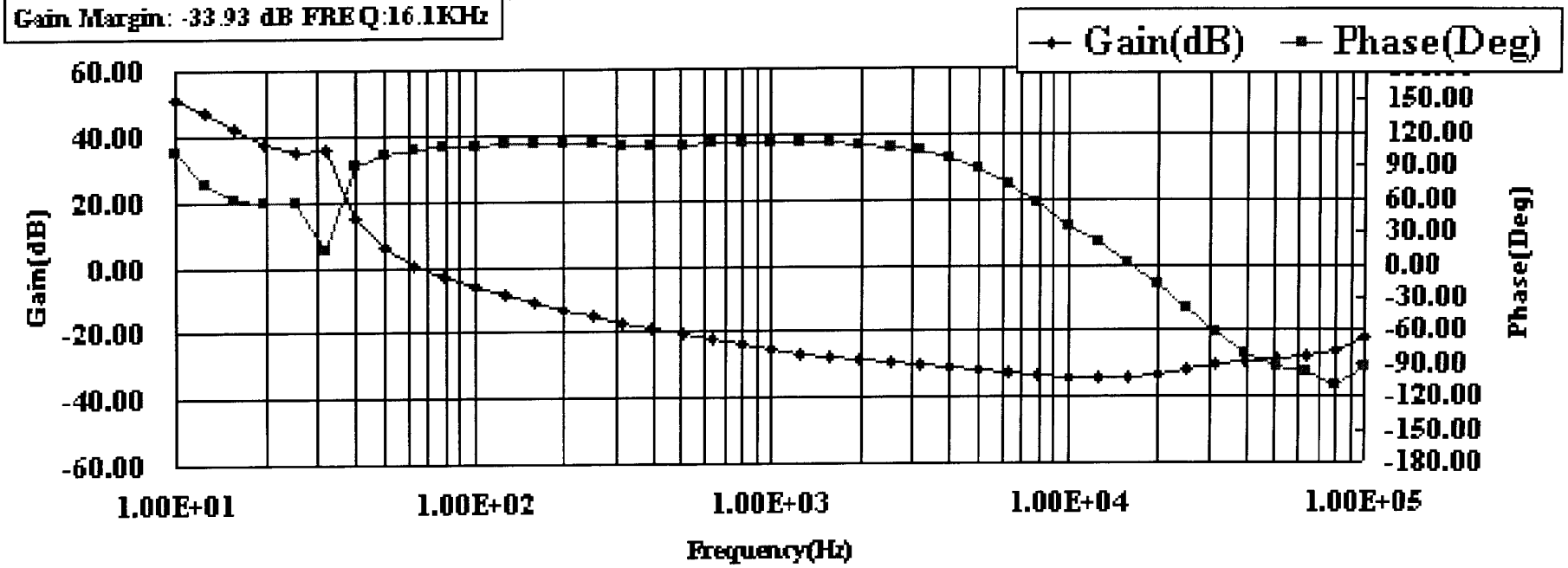

PS-5251-2DFS

Title: PS-5251-2DFS
+5V,+12V MIN LOAD LOOP GAINTest Conditions: Line:132V Temp:25DEG.C
Load:+5V/1A ; OTHERS/0A

Filename:YA Graph of CH2 / CH1
Tested by:MAVIS CHIOU
Date:2003/1/17 Time:15:09:05

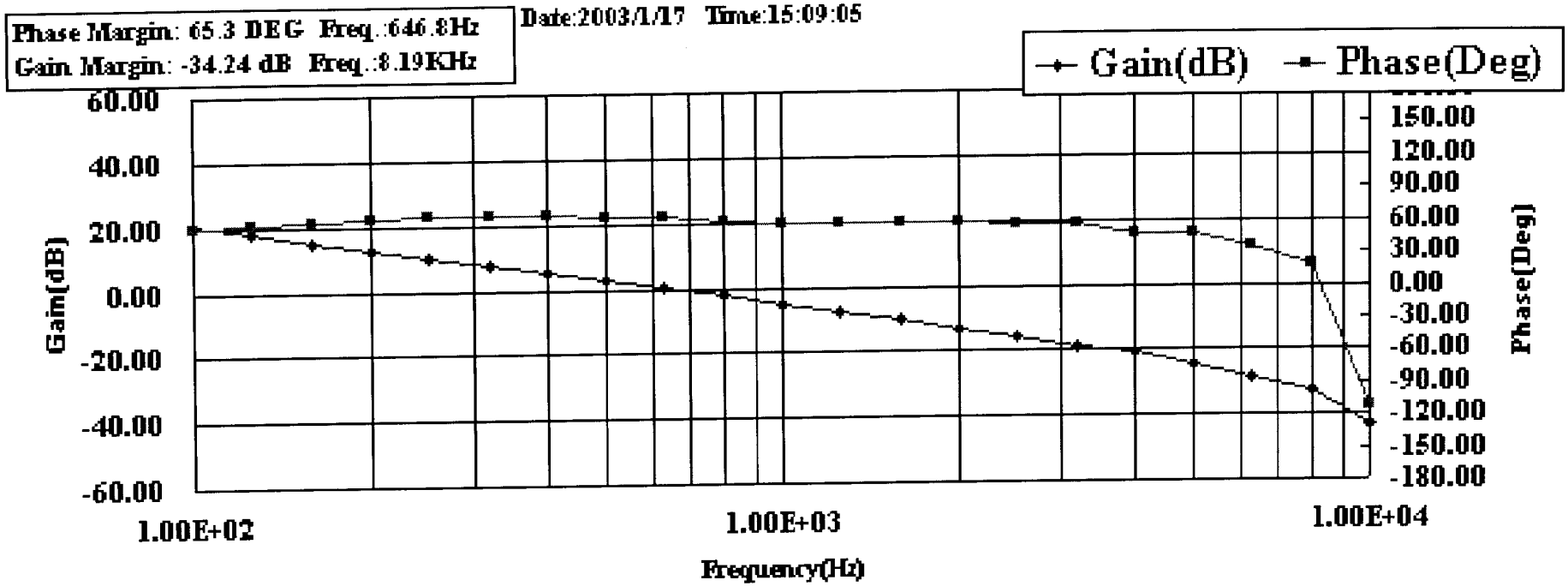

RELIABILITY ENGINEERING REPORT

TO : DOC

DOC NO : 0302807

DATE : 2/12/2003

FROM : QRA RELIABILITY

SUBJECT : PS-5251-2DFS KEY COMPONENT STRESS TEST REPORT.

DESCRIPTION :

1. 此份爲 PS-5251-2DFS KEY COMPONENT STRESS TEST REPORT.

   JUDGE : OK

2. 此份根據 PART LIST REV. D 完成 .

3. 請技資保留原稿存檔 .

敬會 設計工程師 : 劉加義 2/10 03

設計部經理 : Jesten 2/10 03

PREPARED BY : 張家祥 Feb.10'03 CHECKED BY : α APPROVED BY : 林慶揚 Feb.10'03

KEY COMPONENT STRESS (DERATING) TEST REPORT

MODEL NAME : PS-5251-2DFS

INPUT AC RANGE : 90VAC - 135VAC

CONTAIN :
- **COMPONENT SPEC.**
- **COMPONENT VOLTAGE AND CURRENT TEST DATA**
- **COMPONENT TEMPERATURE RISE RECORD**

JUDGE : OK

DESIGN ENGINEER :

PREPARE : 張家禪 Feb,10'03 **CHECK :** α **APPROVAL :** 林廣揚 Feb.10'03

LITEON

KEY COMPONENT STRESS TEST DATA

MODEL NO : PS-5251-2DFS REV : D DATE :01-30-2003

RESISTOR				Component Spec.					Worst Case Stress in Test Data						
No.	LOCATION	TYPE	MAKER	VALUE	POWER	K	VOLT	TEMP.	V(rms)		POWER		TEMP.		
					Watt				INPUT	APPLY	Watt	%	INPUT	APPLY	JUDGE
				OHMS	W		V	℃	VAC	V	W		VAC	50℃	
1	R123	R.MO	ROYAL	0.1	2.000	1.00	350.00	200.0	90	0.32	1.008	50.42	90	58.2	OK
2	R200	R.MO(S)	QUMAO	10	0.500	0.50	300.00	130.0	135	0.74	55.232m	11.05	135	98.1	OK
3	R201	R.MO(S)	QUMAO	10	0.500	0.95	300.00	130.0	115	1.06	0.112	22.47	135	74.6	OK
4	R220	R.MO	QUMAO	47	1.000	0.80	350.00	200.0	***	2.36m	0.119u	0.00	115	52.8	OK
5	R223	R.MO(S)	QUMAO	330	1.000	1.00	350.00	200.0	***	12.20	0.451	45.10	135	55.5	OK
6	R280	R.MO(S)	QUMAO	10	0.500	0.40	300.00	130.0	135	1.19	0.142	28.32	135	99.7	OK
7	R282	R.MO(S)	QUMAO	30	1.000	0.95	350.00	200.0	***	3.49	0.406	40.60	90	74.1	OK
8	R311	R.CF	YAGEO	1K	0.100	1.00	50.00	125.0	135	0.47	219.080u	0.22	90	56.5	OK
9	R3121	R.CF	YAGEO	10000	0.100	1.00	50.00	125.0	***	2.26	511.406u	0.51	90	57.6	OK
10	R3122	R.CF	YAGEO	39K	0.100	1.00	50.00	125.0	***	1.61	66.512u	0.07	90	58.6	OK
11	R313	R.CF	YAGEO	110	0.100	1.00	50.00	125.0	135	0.51	2.406m	2.41	90	57.6	OK
12	R314	R.CF	YAGEO	1K	0.100	1.00	50.00	125.0	90	3.73	13.920m	13.92	90	58.5	OK
13	R315	R.CF	YAGEO	10	0.100	1.00	50.00	125.0	90	40.95m	167.726u	0.17	90	57.6	OK
14	R402	R.CF	YAGEO	6.2K	0.250	1.00	200.00	125.0	135	26.75	0.115	46.15	115	59.9	OK
15	R500	R.MO(S)	QUMAO	1	0.500	1.00	300.00	130.0	90	0.21	43.099m	8.62	90	55.5	OK

TEMP. = Temperature ; *** : 90VAC - 135VAC
AMBIENT TEMPERATURE : 50℃
POWER(TEST DATA; Watt; W) = APPLY * APPLY(TEST DATA; VOLT; V) / OHMS
EXAMPLE : (R500) Watt = 0.21 * 0.21 / 1 = .043099 W
POWER(TEST DATA; %) = POWER(TEST DATA; Watt; W) / POWER(COMPONENT SPEC.;Watt; W) * 100%
EXAMPLE : (R500) POWER (%) = .043099 / 0.500 * 100 (%) = 8.62%

VOLT(TEST DATA; APPLY; V) < VOLT(COMPONENT SPEC.; V)
TEMP.(TEST DATA; 50℃) < TEMP.(COMPONENT SPEC.; ℃)
POWER(TEST DATA; Watt; W) < POWER(COMPONENT SPEC.; Watt; W) * K

LITEON

KEY COMPONENT STRESS TEST DATA

MODEL NO : PS-5251-2DFS **REV : D** **DATE :01-30-2003**

CAPACITOR				Component Spec.						Worst Case Stress in Test Data										
No.	LOCATION	TYPE	MAKER	CAP.	VOLT	RIPPLE	F	T	TEMP.	V(Peak)			I(rms)					TEMP.		
										INPUT	APPLY	%	INPUT	APPLY	FREQ.	Ir'	%	INPUT	APPLY	JUDGE
				F	V	A			℃	VAC	V		VAC	A	Hz	A		VAC	50℃	
1	C120	ELE	OST	680U	200	2.30	1.55	1.30	105.0	135	187.50	93.8	115	2.29	113600	2.04	88.6	90	54.1	OK
2	C120	---	---	---	---	---	1.00	1.30	---	---	---	---	115	2.20	60	---	---	---	---	---
3	C121	ELE	OST	680U	200	2.30	1.55	1.30	105.0	135	187.50	93.8	115	2.27	113600	2.03	88.1	90	62.5	OK
4	C121	---	---	---	---	---	1.00	1.30	---	---	---	---	115	2.19	60	---	---	---	---	---
5	C200	MON	BC	4700P	50	---	---	---	125.0	135	36.25	72.5	---	---	---	---	---	135	99.0	OK
6	C201	PEI	FARAD	4700P	100	---	---	---	85.0	90	42.50	42.5	---	---	---	---	---	90	59.4	OK
7	C202	ELE	TACON	2200U	10	1.65	1.00	1.78	105.0	115	6.31	63.1	90	0.41	113600	0.23	13.9	135	57.3	OK
8	C203	ELE	TACON	2200U	10	1.65	1.00	1.78	105.0	135	5.47	54.7	90	69.20m	113600	38.88m	2.3	135	54.0	OK
9	C220	MON	BC	1000P	100	---	---	---	125.0	90	57.81	57.8	135	0.13	113600	---	---	135	84.4	OK
10	C223	ELE	NCC	2200U	16	2.23	1.00	1.78	105.0	135	12.97	81.1	90	96.75m	113600	54.35m	2.4	90	54.8	OK
11	C224	ELE	NCC	220U	25	0.64	1.00	1.78	105.0	135	14.69	58.8	90	0.89	113600	0.50	78.0	90	58.9	OK
12	C230	ELE	RUBCO	470U	16	0.64	1.00	1.70	105.0	135	12.91	80.7	90	0.82	113600	0.48	75.3	135	61.4	OK
13	C233	ELE	TACON	47u	50	0.30	1.00	1.78	105.0	135	12.91	25.8	90	33.58m	113600	18.87m	6.3	135	64.6	OK
14	C280	PEI	FARAD	4700P	100	---	---	---	85.0	135	29.38	29.4	---	---	---	---	---	90	76.8	OK

TEMP. = Temperature ; F = Frequence Multipliers ; T= Temperature Multipliers ; RIPPLE : Ripple Current ; FREQ. = Frequence

AMBIENT TEMPERATURE : 50℃ ; *** : 90VAC - 135VAC

ELE (Cap. < 680uF, 200V)

Ir' =CURRENT(TEST DATA; APPLY; A) / (F * T)

EXAMPLE : (C233) Ir' = .03358 / (1.00 * 1.78) = .01887 A

ELE (Cap. ≧ 680uF, 200V)

I1 (low FREQ.) = CURRENT (TEST DATA; APPLY; A) / F1

I2 (hiigh FREQ.) = CURRENT (TEST DATA; APPLY; A) / F

$Ir' = \sqrt{I_1^2 + I_2^2} / T$

EXAMPLE : (C121)I_1 (60Hz) = 2.19 / 1 = 2.19A

I_2 (113600Hz) = 2.27 / 1.55 = 1.464516A

$Ir' = \sqrt{2.19^2 + 1.464516^2} / 1.3 = 2.026585A$

MON, DIS, MEX, MEF, PEI

VOLT(TEST DATA; APPLY; V) < VOLT(COMPONENT SPEC.; V) * 90%

TEMP.(TEST DATA; APPLY; 50℃) < TEMP.(COMPONENT SPEC.; ℃)

ELE

VOLT(TEST DATA; APPLY; V) < VOLT(COMPONENT SPEC.; V) * 96% (RATED VOLTAGE ≧ 100 VOLT)

VOLT(TEST DATA; APPLY; V) < VOLT(COMPONENT SPEC.; V) * 85% (RATED VOLTAGE < 100 VOLT)

TEMP.(TEST DATA; APPLY; 50℃) < TEMP.(COMPONENT SPEC.; ℃)

CURRENT(TEST DATA; Ir'; A) < RIPPLE(COMPONENT SPEC.; RIPPLE; A)

LITEON

KEY COMPONENT STRESS TEST DATA

MODEL NO : PS-5251-2DFS **REV : D** **DATE :01-30-2003**

CAPACITOR				Component Spec.						Worst Case Stress in Test Data										
										V(Peak)			I(rms)					TEMP.		
No.	LOCATION	TYPE	MAKER	CAP.	VOLT	RIPPLE	F	T	TEMP.	INPUT	APPLY	%	INPUT	APPLY	FREQ.	Ir'	%	INPUT	APPLY	JUDGE
				F	V	A			℃	VAC	V		VAC	A	Hz	A		VAC	50℃	
15	C281	ELE	TACON	3300U	6	1.65	1.00	1.78	105.0	135	3.50	55.6	135	0.76	113600	0.43	25.7	135	65.4	OK
16	C282	ELE	RUBCO	4700U	6	2.65	1.00	1.70	105.0	135	3.50	55.6	90	0.38	113600	0.22	8.5	135	57.2	OK
17	C501	ELE	LTEC	100U	35	0.50	1.00	2.00	105.0	135	20.31	58.0	90	0.16	113600	78.75m	15.6	135	59.0	OK
18	C503	ELE	RUBCO	1000U	10	1.21	1.00	1.70	105.0	115	6.88	68.8	115	1.12	113600	0.66	54.4	135	75.5	OK
19	C504	ELE	TACON	470U	10	0.56	1.00	1.78	105.0	90	6.41	64.1	90	45.80m	113600	25.73m	4.6	135	58.3	OK
20	C505	ELE	TACON	100U	25	0.29	1.00	1.78	105.0	115	20.31	81.2	90	64.27m	113600	36.11m	12.5	135	61.1	OK
21	C510	ELE	RUBCO	1000U	10	1.05	1.00	1.70	105.0	90	7.66	76.6	115	0.86	113600	0.50	48.0	135	66.1	OK
22	C531	ELE	LTEC	22U	50	0.19	1.00	2.00	105.0	135	5.06	10.1	115	16.61m	113600	8.31m	4.4	135	56.0	OK

TEMP. = Temperature ; F = Frequence Multipliers ; T= Temperature Multipliers ; RIPPLE : Ripple Current ; FREQ. = Frequence
AMBIENT TEMPERATURE : 50℃ ; *** : 90VAC - 135VAC
ELE (Cap. < 680uF, 200V)
Ir' =CURRENT(TEST DATA; APPLY; A) / (F * T)
EXAMPLE : (C531) Ir' = .01661 / (1.00 * 2.00) = .00831 A

MON, DIS, MEX, MEF, PEI
VOLT(TEST DATA; APPLY; V) < VOLT(COMPONENT SPEC.; V) * 90%
TEMP.(TEST DATA; APPLY; 50℃) < TEMP.(COMPONENT SPEC.; ℃)

ELE
VOLT(TEST DATA; APPLY; V) < VOLT(COMPONENT SPEC.; V) * 96% (RATED VOLTAGE ≧ 100 VOLT)
VOLT(TEST DATA; APPLY; V) < VOLT(COMPONENT SPEC.; V) * 85% (RATED VOLTAGE < 100 VOLT)
TEMP.(TEST DATA; APPLY; 50℃) < TEMP.(COMPONENT SPEC.; ℃)
CURRENT(TEST DATA; Ir'; A) < RIPPLE(COMPONENT SPEC.; RIPPLE; A)

LITEON

KEY COMPONENT STRESS TEST DATA

MODEL NO : PS-5251-2DFS **REV : D** **DATE :01-30-2003**

DIODE				Component Spec.						Worst Case Stress in Test Data									
No.	LOCATION	P/N	MAKER	Vr	If(av)	K	Rth(j-c)	Vf	TEMP.	Vr(Peak)			If(av)			TEMP.			
										INPUT	APPLY	%	INPUT	APPLY	%	INPUT	APPLY	Tj	JUDGE
				V	A		℃/W	V	℃	VAC	V		VAC	A		VAC	50℃	50℃	
1	D100	GBU808	LITON	800	8.00	1.00	2.2	1.0	150.0	135	362.50	45.3	90	1.74	21.8	135	70.4	74.2	OK
2	D120	BYV-26E	PHLIP	1000	1.00	1.00	46.0	1.3	175.0	135	725.00	72.5	135	0.13	13.4	90	64.1	72.1	OK
3	D200	MBR3045CT	GS	45	30.00	0.90	1.4	0.7	150.0	135	32.75	72.8	115	10.64	35.5	135	66.1	76.8	OK
4	D201	MBR3045PT	GS	45	30.00	1.00	1.4	0.7	150.0	135	30.00	66.7	90	10.69	35.6	135	76.9	87.7	OK
5	D220	MBR20100CT	LITON	100	20.00	1.00	2.0	0.9	150.0	135	85.94	85.9	90	15.91	79.6	90	77.6	104.6	OK
6	D231	UG2D	GI	200	2.00	1.00	45.0	0.6	150.0	115	156.88	78.4	115	1.00	50.0	135	74.5	103.8	OK
7	D251	ERB91-02	FUJI	200	1.00	0.80	12.0	0.9	150.0	135	56.56	28.3	135	8.61m	0.9	90	68.5	68.6	OK
8	D280	MBR3045PT	GS	45	30.00	0.70	1.4	0.7	150.0	135	37.81	84.0	90	16.78	55.9	135	76.0	92.9	OK
9	D284	1N4002	LITON	100	1.00	1.00	26.0	1.0	175.0	115	2.06	2.1	115	1.23m	0.1	135	74.0	74.0	OK
10	D502	1N4937	LITON	600	1.00	1.00	41.0	1.2	150.0	135	468.75	78.1	135	37.80m	3.8	135	67.8	69.7	OK
11	D503	ERB91-02	FUJI	200	1.00	1.00	12.0	0.9	150.0	135	76.56	38.3	115	4.40m	0.4	135	65.5	65.6	OK
12	D504	BAV20	GS	200	0.25	1.00	1.0	1.0	175.0	135	103.13	51.6	115	36.66m	14.7	135	72.1	72.1	OK
13	D505	SB360	LITON	60	3.00	1.00	10.0	0.7	150.0	115	34.69	57.8	90	1.40	46.7	135	78.2	88.6	OK
14	D531	1N4002	LITON	100	1.00	1.00	26.0	1.0	175.0	90	11.09	11.1	115	4.84m	0.5	135	63.6	63.7	OK

TEMP. = Temperature ; Vf = Max. Forword Voltage; *** : 90VAC - 135VAC
AMBIENT TEMPERATURE : 50℃
Rth(j-c) = Thermal Resistance , Junction to case
Tj = Vf(COMPONENT SPEC.; V) * If(av)(TEST DATA; APPLY; A) * Rth(j-c) + TEMP.(TEST DATA; APPLY; 50℃)
EXAMPLE : (D531) Tj = 1.0 * .00484 * 26.0 + 63.6 = 63.7℃

Vr(TEST DATA; APPLY; V) < Vr(COMPONENT SPEC.; V) * 95%
If(av)(TEST DATA; APPLY; A) < If(av)(COMPONENT SPEC.; A) * K
Tj(TEST DATA; 50℃) < TEMP.(COMPONENT SPEC.; ℃)

LITEON

KEY COMPONENT STRESS TEST DATA

MODEL NO : PS-5251-2DFS **REV : D** **DATE :01-30-2003**

ZENER DIODE				Component Spec.			Worst Case Stress in Test Data									
No.	LOCATION	P/N	MAKER	Pd	Iz	TEMP.	Vz(Peak)		Iz(rms)			Pd		TEMP.		
							INPUT	APPLY	INPUT	APPLY	%		%	INPUT	APPLY	JUDGE
				W	A	℃	VAC	V	VAC	A		W		VAC	50℃	
1	ZD120	1N4744A	PHLIP	1.0	61.0m	200.0	90	14.22	135	15.12m	24.8	0.21	20.64	90	67.6	OK
2	ZD123	1N4734A	MOTOR	1.0	1.0	200.0	135	2.50	135	55.70m	5.6	19.47m	1.95	90	67.5	OK

TEMP. = Temperature ; *** : 90VAC - 135VAC
AMBIENT TEMPERATURE : 50℃
Pd = Vz(TEST DATA; APPLY; Vrms) * Iz(TEST DATA; APPLY; A)
EXAMPLE : (ZD123) Pd = .357446 * .05448 = .01947 W

Iz(TEST DATA; APPLY; A) < Iz(COMPONENT SPEC.; A)
Pd(TEST DATA; W) < Pd(COMPONENT SPEC.; W)
TEMP.(TEST DATA; APPLY; 50℃) < TEMP.(COMPONENT SPEC.; ℃)

LITEON

KEY COMPONENT STRESS TEST DATA

MODEL NO : PS-5251-2DFS **REV : D** **DATE :01-30-2003**

TRANSISTOR				Component Spec.				Worst Case Stress in Test Data									
No.	LOCATION	P/N	MAKER	Vce	Ic	Rth(j-c)	TEMP.	V(Peak)			I(rms)			TEMP.			
									APPLY	%	INPUT	APPLY	%	INPUT	APPLY	Tj	JUDGE
				V	A	℃/W	℃	VAC	V		VAC	A		VAC	50℃	50℃	
1	Q251	KSA916Y	SAMSU	120.0	0.80	1.4	150.0	115	31.88	26.6	115	9.1m	1.14	135	67.70	68.1	OK
2	Q301	2SC1815	TOSHB	50.0	0.15	250.0	125.0	135	5.31	10.6	90	1.3m	0.89	90	55.80	57.2	OK
3	Q311	KST2907A	SAMSU	60.0	0.60	285.0	150.0	90	0.48	0.8	135	4.7m	0.79	90	87.20	87.3	OK
4	Q531	KSA916Y	SAMSU	120.0	0.80	41.6	150.0	90	11.09	9.2	---	0.2	25.93	135	62.40	63.5	OK

TEMP. = Temperature ; *** : 90VAC - 135VAC
AMBIENT TEMPERATURE : 50℃
Rth(j-c) = Thermal Resistance , Junction to case
Tj = Vce(TESTDATA; APPLY; Vrms) * Ic (TEST DATA; APPLY; A)* Rth(j-c) + TEMP.(TEST DATA; APPLY; 50℃)
EXAMPLE : (Q531) Tj = 10.668 * .00237 * 41.6 + 62.40 = 63.5℃

Vce(TEST DATA; APPLY; V) < Vce(COMPONENT SPEC.; V) * 95%
Ic(TEST DATA; APPLY; A) < Ic(COMPONENT SPEC.; A) * 80%
Tj(TEST DATA; 50℃) < TEMP.(COMPONENT SPEC.; ℃)

LITEON

KEY COMPONENT STRESS TEST DATA

MODEL NO : PS-5251-2DFS **REV : D** **DATE :01-30-2003**

V-REGURATOR				Component Spec.				Worst Case Stress in Test Data										
No.	LOCATION	P/N	MAKER	V	I	Rth(j-c)	TEMP.	V(Peak)			Vout	I(rms)			TEMP.			
									APPLY	%	V	INPUT	APPLY	%	INPUT	APPLY	Tj	JUDGE
				V	A	℃/W	℃	VAC	V			VAC	A		VAC	50℃	50℃	
1	IC230	7912ACV	STM	35	1.50	3.0	125.0	90	12.94	37.0	12.00	90	0.97	64.42	135	75.6	77.5	OK
2	IC511	KA431AZ	SAMSU	37	0.15	80.0	150.0	135	11.25	30.4	2.50	90	1.27m	0.85	135	64.6	65.5	OK
3	IC600	KA431AZ	SAMSU	37	0.15	80.0	150.0	135	5.19	14.0	5.00	135	26.54m	17.69	135	58.5	60.7	OK

TEMP. = Temperature ; *** : 90VAC - 135VAC
AMBIENT TEMPERATURE : 50℃
(1) IC230,IC511,IC600
Tj = [Vin(TEST DATA; APPLY; Vrms) - Vout] * I(TEST DATA; APPLY; A) * Rth(j-c) + TEMP.(TEST DATA; APPLY; 50℃)
EXAMPLE:(IC600) Tj =(3.97 - 5) * .02654 * 80.0 + 58.5 = 60.7℃
(2) EXAMPLE : NONE
Tj = V(TEST DATA; APPLY; Vrms) * I(TEST DATA; APPLY; A) * Rth(j-c) + TEMP.(TEST DATA; APPLY; 50℃)

V(TEST DATA; APPLY; V) < V(COMPONENT SPEC.; V) * 95%
I(TEST DATA; APPLY; A) < I(COMPONENT SPEC.; A) * 80%
Tj(TEST DATA; 50℃) < TEMP.(COMPONENT SPEC.; ℃)

LITEON

KEY COMPONENT STRESS TEST DATA

MODEL NO : PS-5251-2DFS **REV : D** **DATE :01-30-2003**

IC				Component Spec.				Worst Case Stress in Test Data										
No.	LOCATION	P/N	MAKER	V	I	TEMP.	Rth(j-C)	V(Peak)			Vout	I(rms)			TEMP.			
								INPUT	APPLY	%	V	INPUT	APPLY	%	INPUT	APPLY	Tj	JUDGE
				V	A	℃	℃/W	VAC	V			VAC	A		VAC	50℃	50℃	
1	IC300	UC3845BN	MOTOR	30	1.00	150.0	49.0	115	17.03	56.77	3.83	115	55.05m	5.51	135	63.4	93.4	OK
2	IC400	TSM111CN	STM	36	30.00m	150.0	80.0	135	19.69	54.69	------	135	6.21m	20.70	135	68.1	77.6	OK

TEMP. = Temperature ; *** : 90VAC - 135VAC
AMBIENT TEMPERATURE : 50℃
(1) IC300
Tj = [Vin(TEST DATA; APPLY; Vrms) - Vout] * I(TEST DATA; APPLY; A) * Rth(j-c) + TEMP.(TEST DATA; APPLY; 50℃)
EXAMPLE:(IC300) Tj =(14.941 - 3.83) * .05505 * 49.0 + 63.4 = 93.4℃
(2) IC400
Tj = V(TEST DATA; APPLY; Vrms) * I(TEST DATA; APPLY; A) * Rth(j-c) + TEMP.(TEST DATA; APPLY; 50℃)
EXAMPLE:(IC400) Tj = 19.189 * .00621 * 80.0 + 68.1 = 77.6℃

Vcc(TEST DATA; APPLY; V) < Vcc(COMPONENT SPEC.; V) * 95%
Ic(TEST DATA; APPLY; A) < Ic(COMPONENT SPEC.; A) * 80%
Tj(TEST DATA; APPLY; 50℃) < TEMP.(COMPONENT SPEC.; ℃)

LITEON

KEY COMPONENT STRESS TEST DATA

MODEL NO : PS-5251-2DFS **REV : D** **DATE :01-30-2003**

MOSFET				Component Spec.					Worst Case Stress in Test Data													
No.	LOCATION	P/N	MAKER	Vds	Vgs	Id	Rth(j-c)	TEMP.	Vds(Peak)			Vgs(Peak)			Id(rms)			P	TEMP.			
									INPUT	APPLY	%	INPUT	APPLY	%	INPUT	APPLY	%		INPUT	APPLY	Tj	JUDGE
				V	V	A	℃/W	℃	VAC	V		VAC	V		VAC	A		W	VAC	50℃	50℃	
1	IC501	TNY267P	POWER	700	9.0	0.4	11.0	150.0	135	550.0	78.6	115	4.22	46.9	90	0.15	36.89	0.56	135	59.5	65.7	OK
2	Q120	2SK2611	TOSHB	900	30.0	9.0	0.8	150.0	135	756.3	84.0	135	13.75	45.8	90	2.61	29.00	9.54	90	69.7	77.6	OK

TEMP. = Temperature ; *** : 90VAC - 135VAC
AMBIENT TEMPERATURE : 50℃
Rth(j-c) = Thermal Resistance , Junction to case
Tj = P (TEST DATA; W) * Rth(j-c) + TEMP.(TEST DATA; APPLY; 50℃)
EXAMPLE : (Q120) Tj =9.54 *0.8 + 69.7 = 77.6℃

Vds(TEST DATA; APPLY; V) < Vds(COMPONENT SPEC.; V) * 95%
Id(TEST DATA; APPLY; A) < Id(COMPONENT SPEC.; A) * 80%
Tj(TEST DATA; APPLY; 50℃) < TEMP.(COMPONENT SPEC.; ℃)
Vgs(TEST DATA; APPLY; V) < Vgs(COMPONENT SPEC.; V) * 95%

LITEON

KEY COMPONENT STRESS TEST DATA

MODEL NO : PS-5251-2DFS **REV : D** **DATE :01-30-2003**

CHOKE		Component Spec.	Worst Case Stress in Test Data		
No.	LOCATION	TEMP.(WINDING)	TEMP.		
			INPUT	APPLY	JUDGE
		℃	VAC	50℃	
1	T120	130	90	87.3	OK
2	T501	130	90	69.3	OK
3	L100	155	135	60.3	OK
4	L101	130	135	71.1	OK
5	L102	130	90	53.6	OK
6	L200	130	90	77.8	OK
7	L201	130	135	80.7	OK
8	L210	130	90	57.0	OK
9	L280	130	90	83.8	OK
10	L281	130	135	86.2	OK
11	L282	130	135	75.6	OK
12	L501	130	135	73.7	OK

TEMP. = Temperature ; *** : 90VAC - 135VAC
AMBIENT TEMPERATURE : 50℃

TEMP.(TEST DATA; APPLY; 50℃) < TEMP.(COMPONENT SPEC.; ℃)

LITEON

KEY COMPONENT STRESS TEST DATA

MODEL NO : PS-5251-2DFS **REV : D** **DATE :01-30-2003**

PHOTO-COUPLE				Component Spec.					Worst Case Stress in Test Data										
No.	LOCATION	P/N	MAKER	Vce(Vr)	Ic(If)	P	TEMP.	Rth(j-c)	Vr(Peak)			Ic(If)			P	TEMP.			
									INPUT	APPLY	%	INPUT	APPLY	%		INPUT	APPLY	Tj	JUDGE
				V	A	W	℃	℃/W	VAC	V		VAC	A		W	VAC	50℃	50℃	
1	PC301	LTV817B	LITON	35.0	50.0m	0.15	125.0	500.0	135	3.690	10.5	135	5.95m	11.9	13.09m	90	81.1	87.6	OK
2	PC3012	LTV817B	LITON	6.0	50.0m	70.00m	125.0	500.0	90	1.560	26.0	135	5.96m	11.9	6.68m	90	81.1	84.4	OK
3	PC401	LTV817B	LITON	35.0	50.0m	0.15	125.0	500.0	115	1.810	5.2	115	19.57m	39.1	14.90m	90	69.2	76.7	OK
4	PC4012	LTV817B	LITON	6.0	50.0m	70.00m	125.0	500.0	135	2.000	33.3	90	27.80m	55.6	25.19m	90	69.2	81.8	OK
5	PC501	LTV817B	LITON	35.0	50.0m	0.15	125.0	500.0	135	2.250	6.4	135	1.13m	2.3	451.71u	90	85.7	85.9	OK
6	PC5012	LTV817B	LITON	6.0	50.0m	70.00m	125.0	500.0	90	1.590	26.5	115	9.37m	18.7	10.21m	90	85.7	90.8	OK
7	PC502	LTV817B	LITON	35.0	50.0m	0.15	125.0	500.0	135	10.940	31.3	135	6.62m	13.2	9.18m	90	85.7	90.3	OK
8	PC5022	LTV817B	LITON	6.0	50.0m	70.00m	125.0	500.0	90	1.530	25.5	135	4.95m	9.9	4.87m	90	85.7	88.1	OK

TEMP. = Temperature ; *** : 90VAC - 135VAC
AMBIENT TEMPERATURE : 50℃
Tj = Vce(Vr)(TEST DATA; APPLY; Vrms) * Ic(If)(TEST DATA; APPLY; A) * Rth(j-c) + TEMP.(TEST DATA; APPLY; 50℃)
EXAMPLE : (PC5022) Tj = .9842 * .00495 * 500.0 + 85.7 = 88.1℃

Vce(Vr)(TEST DATA; APPLY; V) < Vce(Vr)(COMPONENT SPEC.; V) * 95%
Ic(If)(TEST DATA; APPLY; A) < Ic(If)(COMPONENT SPEC.; A) * 80%
P(TEST DATA; APPLY; W) < P(COMPONENT SPEC.; W)
Tj(TEST DATA; 50℃) < TEMP.(COMPONENT SPEC.; ℃)

KEY COMPONENT STRESS (DERATING) TEST REPORT

MODEL NAME : PS-5251-2DFS

INPUT AC RANGE : 180VAC - 265VAC

CONTAIN :
- **COMPONENT SPEC.**
- **COMPONENT VOLTAGE AND CURRENT TEST DATA**
- **COMPONENT TEMPERATURE RISE RECORD**

JUDGE : OK

DESIGN ENGINEER :

PREPARE : 張家瑋 Feb,10'03 **CHECK :** ✗ **APPROVAL :** 林廣陽 Feb. 10 03

LITEON

KEY COMPONENT STRESS TEST DATA

MODEL NO : PS-5251-2DFS **REV : D** **DATE :01-30-2003**

RESISTOR				Component Spec.					Worst Case Stress in Test Data						
No.	LOCATION	TYPE	MAKER	VALUE	POWER	K	VOLT	TEMP.	V(rms)		POWER		TEMP.		
					Watt				INPUT	APPLY	Watt	%	INPUT	APPLY	JUDGE
				OHMS	W		V	℃	VAC	V	W		VAC	50℃	
1	R123	R.MO	ROYAL	0.1	2.000	1.00	350.00	200.0	180	0.30	0.914	45.72	230	67.1	OK
2	R200	R.MO(S)	QUMAO	10	0.500	0.50	300.00	130.0	265	0.74	54.825m	10.97	265	94.4	OK
3	R201	R.MO(S)	QUMAO	10	0.500	0.95	300.00	130.0	180	0.82	66.564m	13.31	180	73.8	OK
4	R220	R.MO	QUMAO	47	1.000	0.80	350.00	200.0	***	2.32m	0.115u	0.00	180	52.6	OK
5	R223	R.MO(S)	QUMAO	330	1.000	1.00	350.00	200.0	***	12.16	0.448	44.81	230	55.6	OK
6	R280	R.MO(S)	QUMAO	10	0.500	0.40	300.00	130.0	265	0.66	43.865m	8.77	265	98.8	OK
7	R282	R.MO(S)	QUMAO	30	1.000	0.95	350.00	200.0	***	3.49	0.406	40.60	265	73.9	OK
8	R311	R.CF	YAGEO	1K	0.100	1.00	50.00	125.0	265	0.48	228.446u	0.23	180	55.5	OK
9	R3121	R.CF	YAGEO	10000	0.100	1.00	50.00	125.0	***	2.28	520.201u	0.52	180	56.6	OK
10	R3122	R.CF	YAGEO	39K	0.100	1.00	50.00	125.0	***	1.61	66.530u	0.07	180	57.6	OK
11	R313	R.CF	YAGEO	110	0.100	1.00	50.00	125.0	230	0.45	1.838m	1.84	180	56.6	OK
12	R314	R.CF	YAGEO	1K	0.100	1.00	50.00	125.0	180	3.73	13.888m	13.89	180	57.5	OK
13	R315	R.CF	YAGEO	10	0.100	1.00	50.00	125.0	230	40.31m	162.480u	0.16	180	56.9	OK
14	R402	R.CF	YAGEO	6.2K	0.250	1.00	200.00	125.0	265	26.90	0.117	46.68	180	58.5	OK
15	R500	R.MO(S)	QUMAO	1	0.500	1.00	300.00	130.0	180	81.90m	6.707m	1.34	180	55.8	OK

TEMP. = Temperature ; *** : 180VAC - 265VAC
AMBIENT TEMPERATURE : 50℃
POWER(TEST DATA; Watt; W) = APPLY * APPLY(TEST DATA; VOLT; V) / OHMS
EXAMPLE : (R500) Watt = .0819 * .0819 / 1 = .006707 W
POWER(TEST DATA; %) = POWER(TEST DATA; Watt; W) / POWER(COMPONENT SPEC.;Watt; W) * 100%
EXAMPLE : (R500) POWER (%) = .006707 / 0.500 * 100 (%) = 1.34%

VOLT(TEST DATA; APPLY; V) < VOLT(COMPONENT SPEC.; V)
TEMP.(TEST DATA; 50℃) < TEMP.(COMPONENT SPEC.; ℃)
POWER(TEST DATA; Watt; W) < POWER(COMPONENT SPEC.; Watt; W) * K

LITEON

KEY COMPONENT STRESS TEST DATA

MODEL NO : PS-5251-2DFS **REV : D** **DATE :01-30-2003**

CAPACITOR				Component Spec.						Worst Case Stress in Test Data										
No.	LOCATION	TYPE	MAKER	CAP.	VOLT	RIPPLE	F	T	TEMP.	V(Peak)			I(rms)					TEMP.		
										INPUT	APPLY	%	INPUT	APPLY	FREQ.	Ir'	%	INPUT	APPLY	JUDGE
				F	V	A			℃	VAC	V		VAC	A	Hz	A		VAC	50℃	
1	C120	ELE	OST	680U	200	2.30	1.55	1.30	105.0	265	184.38	92.2	180	2.51	113600	2.12	92.3	265	50.0	OK
2	C120	---	---	---	---	---	1.00	1.30	---	---	---	---	265	2.43	100	---	---	---	---	---
3	C121	ELE	OST	680U	200	2.30	1.55	1.30	105.0	265	190.63	95.3	180	2.52	113600	1.95	84.9	180	56.5	OK
4	C121	---	---	---	---	---	1.00	1.30	---	---	---	---	180	1.95	60	---	---	---	---	---
5	C200	MON	BC	4700P	50	---	---	---	125.0	265	36.25	72.5	---	---	---	---	---	265	98.4	OK
6	C201	PEI	FARAD	4700P	100	---	---	---	85.0	180	42.50	42.5	---	---	---	---	---	180	59.8	OK
7	C202	ELE	TACON	2200U	10	1.65	1.00	1.78	105.0	265	6.38	63.8	180	0.42	113600	0.24	14.2	230	65.5	OK
8	C203	ELE	TACON	2200U	10	1.65	1.00	1.78	105.0	230	5.38	53.8	230	56.96m	113600	32.00m	1.9	230	59.5	OK
9	C220	MON	BC	1000P	100	---	---	---	125.0	180	57.81	57.8	180	1.84	100	---	---	265	84.2	OK
10	C223	ELE	NCC	2200U	16	2.23	1.00	1.78	105.0	180	12.81	80.1	180	90.40m	113600	50.79m	2.3	265	54.8	OK
11	C224	ELE	NCC	220U	25	0.64	1.00	1.78	105.0	265	14.69	58.8	180	0.89	113600	0.50	78.2	180	56.6	OK
12	C230	ELE	RUBCO	470U	16	0.64	1.00	1.70	105.0	265	12.91	80.7	180	0.80	113600	0.47	73.2	230	74.2	OK
13	C233	ELE	TACON	47u	50	0.30	1.00	1.78	105.0	180	12.13	24.3	265	31.61m	113600	17.76m	5.9	230	67.9	OK
14	C280	PEI	FARAD	4700P	100	---	---	---	85.0	265	25.31	25.3	---	---	---	---	---	180	76.1	OK

TEMP. = Temperature ; F = Frequence Multipliers ; T= Temperature Multipliers ; RIPPLE : Ripple Current ; FREQ. = Frequence

AMBIENT TEMPERATURE : 50℃ ; *** : 180VAC - 265VAC

ELE (Cap. < 680uF, 200V)

Ir' =CURRENT(TEST DATA; APPLY; A) / (F * T)

EXAMPLE : (C233) Ir' = .03161 / (1.00 * 1.78) = .01776 A

ELE (Cap. ≧ 680uF, 200V)

I1 (low FREQ.) = CURRENT (TEST DATA; APPLY; A) / F1

I2 (hiigh FREQ.) = CURRENT (TEST DATA; APPLY; A) / F

$Ir' = \sqrt{I_1^2 + I_2^2} / T$

EXAMPLE : (C121)I_1 (60Hz) = 1.95 / 1 = 1.95A

I_2 (113600Hz) = 2.52 / 1.55 = 1.625806A

$Ir' = \sqrt{1.95^2 + 1.625806^2} / 1.3 = 1.95296A$

MON, DIS, MEX, MEF, PEI

VOLT(TEST DATA; APPLY; V) < VOLT(COMPONENT SPEC.; V) * 90%

TEMP.(TEST DATA; APPLY; 50℃) < TEMP.(COMPONENT SPEC.; ℃)

ELE

VOLT(TEST DATA; APPLY; V) < VOLT(COMPONENT SPEC.; V) * 96% (RATED VOLTAGE ≧ 100 VOLT)

VOLT(TEST DATA; APPLY; V) < VOLT(COMPONENT SPEC.; V) * 85% (RATED VOLTAGE < 100 VOLT)

TEMP.(TEST DATA; APPLY; 50℃) < TEMP.(COMPONENT SPEC.; ℃)

CURRENT(TEST DATA; Ir'; A) < RIPPLE(COMPONENT SPEC.; RIPPLE; A)

LITEON

KEY COMPONENT STRESS TEST DATA

MODEL NO : PS-5251-2DFS **REV : D** **DATE :01-30-2003**

CAPACITOR				Component Spec.						Worst Case Stress in Test Data										
No.	LOCATION	TYPE	MAKER	CAP.	VOLT	RIPPLE	F	T	TEMP.	V(Peak)			I(rms)					TEMP.		
										INPUT	APPLY	%	INPUT	APPLY	FREQ.	Ir'	%	INPUT	APPLY	JUDGE
				F	V	A			℃	VAC	V		VAC	A	Hz	A		VAC	50℃	
15	C281	ELE	TACON	3300U	6	1.65	1.00	1.78	105.0	265	3.50	55.6	265	0.76	113600	0.43	25.9	230	70.9	OK
16	C282	ELE	RUBCO	4700U	6	2.65	1.00	1.70	105.0	265	3.50	55.6	230	0.35	113600	0.21	7.8	230	63.5	OK
17	C501	ELE	LTEC	100U	35	0.50	1.00	2.00	105.0	265	20.63	58.9	180	0.15	113600	72.65m	14.4	180	60.4	OK
18	C503	ELE	RUBCO	1000U	10	1.21	1.00	1.70	105.0	180	6.44	64.4	180	0.97	113600	0.57	47.4	180	75.0	OK
19	C504	ELE	TACON	470U	10	0.56	1.00	1.78	105.0	265	5.94	59.4	265	45.97m	113600	25.83m	4.7	180	58.8	OK
20	C505	ELE	TACON	100U	25	0.29	1.00	1.78	105.0	265	20.31	81.2	180	55.44m	113600	31.15m	10.7	230	73.1	OK
21	C510	ELE	RUBCO	1000U	10	1.05	1.00	1.70	105.0	265	6.13	61.3	230	0.85	113600	0.50	47.6	180	66.1	OK
22	C531	ELE	LTEC	22U	50	0.19	1.00	2.00	105.0	265	5.13	10.3	230	15.28m	113600	7.64m	4.0	180	56.8	OK

TEMP. = Temperature ; F = Frequence Multipliers ; T= Temperature Multipliers ; RIPPLE : Ripple Current ; FREQ. = Frequence
AMBIENT TEMPERATURE : 50℃ ; *** : 180VAC - 265VAC
ELE (Cap. < 680uF, 200V)
Ir' =CURRENT(TEST DATA; APPLY; A) / (F * T)
EXAMPLE : (C531) Ir' = .01528 / (1.00 * 2.00) = .00764 A

MON, DIS, MEX, MEF, PEI
VOLT(TEST DATA; APPLY; V) < VOLT(COMPONENT SPEC.; V) * 90%
TEMP.(TEST DATA; APPLY; 50℃) < TEMP.(COMPONENT SPEC.; ℃)

ELE
VOLT(TEST DATA; APPLY; V) < VOLT(COMPONENT SPEC.; V) * 96% (RATED VOLTAGE ≧ 100 VOLT)
VOLT(TEST DATA; APPLY; V) < VOLT(COMPONENT SPEC.; V) * 85% (RATED VOLTAGE < 100 VOLT)
TEMP.(TEST DATA; APPLY; 50℃) < TEMP.(COMPONENT SPEC.; ℃)
CURRENT(TEST DATA; Ir'; A) < RIPPLE(COMPONENT SPEC.; RIPPLE; A)

LITEON

KEY COMPONENT STRESS TEST DATA

MODEL NO : PS-5251-2DFS **REV : D** **DATE :01-30-2003**

DIODE				Component Spec.						Worst Case Stress in Test Data									
No.	LOCATION	P/N	MAKER	Vr	If(av)	K	Rth(j-c)	Vf	TEMP.	Vr(Peak)			If(av)			TEMP.			
										INPUT	APPLY	%	INPUT	APPLY	%	INPUT	APPLY	Tj	JUDGE
				V	A		℃/W	V	℃	VAC	V		VAC	A		VAC	50℃	50℃	
1	D100	GBU808	LITON	800	8.00	1.00	2.2	1.0	150.0	265	375.00	46.9	180	1.76	22.0	180	79.9	83.8	OK
2	D120	BYV-26E	PHLIP	1000	1.00	1.00	46.0	1.3	175.0	265	731.25	73.1	180	0.14	13.6	230	68.8	76.9	OK
3	D200	MBR3045CT	GS	45	30.00	0.90	1.4	0.7	150.0	265	40.75	90.6	265	10.87	36.2	180	84.6	95.6	OK
4	D201	MBR3045PT	GS	45	30.00	1.00	1.4	0.7	150.0	265	40.63	90.3	265	10.96	36.5	180	79.8	90.8	OK
5	D220	MBR20100CT	LITON	100	20.00	1.00	2.0	0.9	150.0	265	87.50	87.5	180	15.94	79.7	180	74.9	102.0	OK
6	D231	UG2D	GI	200	2.00	1.00	45.0	0.6	150.0	230	154.69	77.3	265	0.81	40.3	230	73.6	97.2	OK
7	D251	ERB91-02	FUJI	200	1.00	0.80	12.0	0.9	150.0	265	54.38	27.2	265	8.31m	0.8	265	69.0	69.1	OK
8	D280	MBR3045PT	GS	45	30.00	0.70	1.4	0.7	150.0	265	39.38	87.5	180	17.95	59.8	180	89.8	107.9	OK
9	D284	1N4002	LITON	100	1.00	1.00	26.0	1.0	175.0	180	2.13	2.1	180	1.17m	0.1	265	73.5	73.5	OK
10	D502	1N4937	LITON	600	1.00	1.00	41.0	1.2	150.0	265	475.00	79.2	180	38.22m	3.8	230	74.5	76.4	OK
11	D503	ERB91-02	FUJI	200	1.00	1.00	12.0	0.9	150.0	265	79.69	39.8	265	3.79m	0.4	230	73.9	73.9	OK
12	D504	BAV20	GS	200	0.25	1.00	1.0	1.0	175.0	265	110.94	55.5	230	26.31m	10.5	180	71.5	71.5	OK
13	D505	SB360	LITON	60	3.00	1.00	10.0	0.7	150.0	265	34.69	57.8	180	1.41	47.0	230	81.6	92.0	OK
14	D531	1N4002	LITON	100	1.00	1.00	26.0	1.0	175.0	265	11.72	11.7	230	4.72m	0.5	180	65.0	65.1	OK

TEMP. = Temperature ; Vf = Max. Forword Voltage; *** : 180VAC - 265VAC
AMBIENT TEMPERATURE : 50℃
Rth(j-c) = Thermal Resistance , Junction to case
Tj = Vf(COMPONENT SPEC.; V) * If(av)(TEST DATA; APPLY; A) * Rth(j-c) + TEMP.(TEST DATA; APPLY; 50℃)
EXAMPLE : (D531) Tj = 1.0 * .00472 * 26.0 + 65.0 = 65.1℃

Vr(TEST DATA; APPLY; V) < Vr(COMPONENT SPEC.; V) * 95%
If(av)(TEST DATA; APPLY; A) < If(av)(COMPONENT SPEC.; A) * K
Tj(TEST DATA; 50℃) < TEMP.(COMPONENT SPEC.; ℃)

LITEON

KEY COMPONENT STRESS TEST DATA

MODEL NO : PS-5251-2DFS **REV : D** **DATE :01-30-2003**

ZENER DIODE				Component Spec.			Worst Case Stress in Test Data									
No.	LOCATION	P/N	MAKER	Pd	Iz	TEMP.	Vz(Peak)		Iz(rms)			Pd		TEMP.		
							INPUT	APPLY	INPUT	APPLY	%		%	INPUT	APPLY	JUDGE
				W	A	℃	VAC	V	VAC	A		W		VAC	50℃	
1	ZD120	1N4744A	PHLIP	1.0	61.0m	200.0	180	16.06	265	15.54m	25.5	0.22	21.68	180	66.6	OK
2	ZD123	1N4734A	MOTOR	1.0	1.0	200.0	230	3.56	230	53.54m	5.4	19.25m	1.92	180	66.2	OK

TEMP. = Temperature ; *** : 180VAC - 265VAC
AMBIENT TEMPERATURE : 50℃
Pd = Vz(TEST DATA; APPLY; Vrms) * Iz(TEST DATA; APPLY; A)
EXAMPLE : (ZD123) Pd = .359541 * .05354 = .01925 W

Iz(TEST DATA; APPLY; A) < Iz(COMPONENT SPEC.; A)
Pd(TEST DATA; W) < Pd(COMPONENT SPEC.; W)
TEMP.(TEST DATA; APPLY; 50℃) < TEMP.(COMPONENT SPEC.; ℃)

LITEON

KEY COMPONENT STRESS TEST DATA

MODEL NO : PS-5251-2DFS REV : D DATE :01-30-2003

TRANSISTOR				Component Spec.				Worst Case Stress in Test Data									
No.	LOCATION	P/N	MAKER	Vce	Ic	Rth(j-c)	TEMP.	V(Peak)			I(rms)			TEMP.			
									APPLY	%	INPUT	APPLY	%	INPUT	APPLY	Tj	JUDGE
				V	A	℃/W	℃	VAC	V		VAC	A		VAC	50℃	50℃	
1	Q251	KSA916Y	SAMSU	120.0	0.80	1.4	150.0	230	29.38	24.5	265	9.1m	1.13	180	67.60	68.0	OK
2	Q301	2SC1815	TOSHB	50.0	0.15	250.0	125.0	265	5.31	10.6	180	1.4m	0.95	180	55.70	57.3	OK
3	Q311	KST2907A	SAMSU	60.0	0.60	285.0	150.0	230	0.39	0.7	265	5.2m	0.87	180	64.10	64.2	OK
4	Q531	KSA916Y	SAMSU	120.0	0.80	41.6	150.0	230	8.59	7.2	180	1.9m	0.24	180	64.10	64.7	OK

TEMP. = Temperature ; *** : 180VAC - 265VAC
AMBIENT TEMPERATURE : 50℃
Rth(j-c) = Thermal Resistance , Junction to case
Tj = Vce(TESTDATA; APPLY; Vrms) * Ic (TEST DATA; APPLY; A)* Rth(j-c) + TEMP.(TEST DATA; APPLY; 50℃)
EXAMPLE : (Q531) Tj = 7.818 * .00194 * 41.6 + 64.10 = 64.7℃

Vce(TEST DATA; APPLY; V) < Vce(COMPONENT SPEC.; V) * 95%
Ic(TEST DATA; APPLY; A) < Ic(COMPONENT SPEC.; A) * 80%
Tj(TEST DATA; 50℃) < TEMP.(COMPONENT SPEC.; ℃)

LITEON

KEY COMPONENT STRESS TEST DATA

MODEL NO : PS-5251-2DFS **REV : D** **DATE :01-30-2003**

V-REGURATOR				Component Spec.				Worst Case Stress in Test Data										
No.	LOCATION	P/N	MAKER	V	I	Rth(j-c)	TEMP.	V(Peak)			Vout	I(rms)			TEMP.			
									APPLY	%	V	INPUT	APPLY	%	INPUT	APPLY	Tj	JUDGE
				V	A	℃/W	℃	VAC	V			VAC	A		VAC	50℃	50℃	
1	IC230	7912ACV	STM	35	1.50	3.0	125.0	180	12.98	37.1	12.00	230	0.96	63.95	180	75.7	77.3	OK
2	IC511	KA431AZ	SAMSU	37	0.15	80.0	150.0	265	11.25	30.4	2.50	180	2.08m	1.39	180	66.7	68.1	OK
3	IC600	KA431AZ	SAMSU	37	0.15	80.0	150.0	230	6.06	16.4	5.00	180	26.76m	17.84	180	59.0	61.2	OK

TEMP. = Temperature ; *** : 180VAC - 265VAC
AMBIENT TEMPERATURE : 50℃
(1) IC230,IC511,IC600
Tj = [Vin(TEST DATA; APPLY; Vrms) - Vout] * I(TEST DATA; APPLY; A) * Rth(j-c) + TEMP.(TEST DATA; APPLY; 50℃)
EXAMPLE:(IC600) Tj =(3.98 - 5) * .02676 * 80.0 + 59.0 = 61.2℃
(2) EXAMPLE : NONE
Tj = V(TEST DATA; APPLY; Vrms) * I(TEST DATA; APPLY; A) * Rth(j-c) + TEMP.(TEST DATA; APPLY; 50℃)

V(TEST DATA; APPLY; V) < V(COMPONENT SPEC.; V) * 95%
I(TEST DATA; APPLY; A) < I(COMPONENT SPEC.; A) * 80%
Tj(TEST DATA; 50℃) < TEMP.(COMPONENT SPEC.; ℃)

LITEON

KEY COMPONENT STRESS TEST DATA

MODEL NO : PS-5251-2DFS **REV : D** **DATE :01-30-2003**

IC				Component Spec.				Worst Case Stress in Test Data										
No.	LOCATION	P/N	MAKER	V	I	TEMP.	Rth(j-C)	V(Peak)			Vout	I(rms)			TEMP.			
								INPUT	APPLY	%	V	INPUT	APPLY	%	INPUT	APPLY	Tj	JUDGE
				V	A	℃	℃/W	VAC	V			VAC	A		VAC	50℃	50℃	
1	IC300	UC3845BN	MOTOR	30	1.00	150.0	49.0	230	17.50	58.33	3.83	265	59.90m	5.99	180	64.5	96.8	OK
2	IC400	TSM111CN	STM	36	30.00m	150.0	80.0	265	19.69	54.69	------	265	6.34m	21.13	180	68.2	77.9	OK

TEMP. = Temperature ; *** : 180VAC - 265VAC
AMBIENT TEMPERATURE : 50℃
(1) IC300
Tj = [Vin(TEST DATA; APPLY; Vrms) - Vout] * I(TEST DATA; APPLY; A) * Rth(j-c) + TEMP.(TEST DATA; APPLY; 50℃)
EXAMPLE:(IC300) Tj =(14.847 - 3.83) * .0599 * 49.0 + 64.5 = 96.8℃
(2) IC400
Tj = V(TEST DATA; APPLY; Vrms) * I(TEST DATA; APPLY; A) * Rth(j-c) + TEMP.(TEST DATA; APPLY; 50℃)
EXAMPLE:(IC400) Tj = 19.18 * .00634 * 80.0 + 68.2 = 77.9℃

Vcc(TEST DATA; APPLY; V) < Vcc(COMPONENT SPEC.; V) * 95%
Ic(TEST DATA; APPLY; A) < Ic(COMPONENT SPEC.; A) * 80%
Tj(TEST DATA; APPLY; 50℃) < TEMP.(COMPONENT SPEC.; ℃)

LITEON

KEY COMPONENT STRESS TEST DATA

MODEL NO : PS-5251-2DFS **REV : D** **DATE :01-30-2003**

MOSFET				Component Spec.					Worst Case Stress in Test Data													
No.	LOCATION	P/N	MAKER	Vds	Vgs	Id	Rth(j-c)	TEMP.	Vds(Peak)			Vgs(Peak)			Id(rms)			P	TEMP.			
									INPUT	APPLY	%	INPUT	APPLY	%	INPUT	APPLY	%		INPUT	APPLY	Tj	JUDGE
				V	V	A	℃/W	℃	VAC	V		VAC	V		VAC	A		W	VAC	50℃	50℃	
1	IC501	TNY267P	POWER	700	9.0	0.4	11.0	150.0	265	556.3	79.5	265	3.91	43.4	180	0.14	33.94	0.56	180	59.4	65.6	OK
2	Q120	2SK2611	TOSHB	900	30.0	9.0	0.8	150.0	265	712.5	79.2	180	13.59	45.3	180	2.45	27.22	9.54	180	66.7	74.6	OK

TEMP. = Temperature ; *** : 180VAC - 265VAC
AMBIENT TEMPERATURE : 50℃
Rth(j-c) = Thermal Resistance , Junction to case
Tj = P (TEST DATA; W) * Rth(j-c) + TEMP.(TEST DATA; APPLY; 50℃)
EXAMPLE : (Q120) Tj =9.54 *0.8 + 66.7 = 74.6℃

Vds(TEST DATA; APPLY; V) < Vds(COMPONENT SPEC.; V) * 95%
Id(TEST DATA; APPLY; A) < Id(COMPONENT SPEC.; A) * 80%
Tj(TEST DATA; APPLY; 50℃) < TEMP.(COMPONENT SPEC.; ℃)
Vgs(TEST DATA; APPLY; V) < Vgs(COMPONENT SPEC.; V) * 95%

LITEON

KEY COMPONENT STRESS TEST DATA

MODEL NO : PS-5251-2DFS **REV : D** **DATE :01-30-2003**

CHOKE		Component Spec.	Worst Case Stress in Test Data		
No.	LOCATION	TEMP.(WINDING)	TEMP.		
			INPUT	APPLY	JUDGE
		℃	VAC	50℃	
1	T120	130	180	84.5	OK
2	T501	130	180	69.3	OK
3	L100	155	180	64.0	OK
4	L101	130	180	74.3	OK
5	L102	130	180	90.8	OK
6	L200	130	230	77.7	OK
7	L201	130	265	79.5	OK
8	L210	130	265	59.4	OK
9	L280	130	180	85.0	OK
10	L281	130	180	99.2	OK
11	L282	130	180	75.5	OK
12	L501	130	180	73.7	OK

TEMP. = Temperature ; *** : 180VAC - 265VAC
AMBIENT TEMPERATURE : 50℃

TEMP.(TEST DATA; APPLY; 50℃) < TEMP.(COMPONENT SPEC.; ℃)

LITEON

KEY COMPONENT STRESS TEST DATA

MODEL NO : PS-5251-2DFS **REV : D** **DATE :01-30-2003**

PHOTO-COUPLE				Component Spec.					Worst Case Stress in Test Data										
No.	LOCATION	P/N	MAKER	Vce(Vr)	Ic(If)	P	TEMP.	Rth(j-c)	Vr(Peak)			Ic(If)			P	TEMP.			
									INPUT	APPLY	%	INPUT	APPLY	%		INPUT	APPLY	Tj	JUDGE
				V	A	W	℃	℃/W	VAC	V		VAC	A		W	VAC	50℃	50℃	
1	PC301	LTV817B	LITON	35.0	50.0m	0.15	125.0	500.0	265	4.130	11.8	230	5.85m	11.7	12.42m	180	80.2	86.4	OK
2	PC3012	LTV817B	LITON	6.0	50.0m	70.00m	125.0	500.0	180	1.530	25.5	265	5.67m	11.3	6.35m	180	80.2	83.4	OK
3	PC401	LTV817B	LITON	35.0	50.0m	0.15	125.0	500.0	265	1.630	4.7	180	17.17m	34.3	13.14m	180	66.6	73.2	OK
4	PC4012	LTV817B	LITON	6.0	50.0m	70.00m	125.0	500.0	265	2.130	35.5	180	26.16m	52.3	23.33m	180	66.6	78.3	OK
5	PC501	LTV817B	LITON	35.0	50.0m	0.15	125.0	500.0	180	1.880	5.4	180	1.06m	2.1	387.71u	180	85.5	85.7	OK
6	PC5012	LTV817B	LITON	6.0	50.0m	70.00m	125.0	500.0	180	1.520	25.3	180	9.41m	18.8	10.26m	180	85.5	90.6	OK
7	PC502	LTV817B	LITON	35.0	50.0m	0.15	125.0	500.0	230	10.630	30.4	265	6.44m	12.9	8.49m	180	85.6	89.8	OK
8	PC5022	LTV817B	LITON	6.0	50.0m	70.00m	125.0	500.0	180	1.530	25.5	265	4.83m	9.7	4.77m	180	85.6	88.0	OK

TEMP. = Temperature ; *** : 180VAC - 265VAC
AMBIENT TEMPERATURE : 50℃
Tj = Vce(Vr)(TEST DATA; APPLY; Vrms) * Ic(If)(TEST DATA; APPLY; A) * Rth(j-c) + TEMP.(TEST DATA; APPLY; 50℃)
EXAMPLE : (PC5022) Tj = .987 * .00483 * 500.0 + 85.6 = 88.0℃

Vce(Vr)(TEST DATA; APPLY; V) < Vce(Vr)(COMPONENT SPEC.; V) * 95%
Ic(If)(TEST DATA; APPLY; A) < Ic(If)(COMPONENT SPEC.; A) * 80%
P(TEST DATA; APPLY; W) < P(COMPONENT SPEC.; W)
Tj(TEST DATA; 50℃) < TEMP.(COMPONENT SPEC.; ℃)

PS-5251-2DFS MTBF REPORT LIST REV. D 01-30-2003			
COMPONENT	**FAILURE RATE**	**Q'TY**	**PAGE NO.**
Resistor	260.64	68	1, 2, 3
Capacitor	2980.31	69	4, 5, 6
Diode	1888.67	29	7, 8
Transformer	174.11	2	9
Transistor	10.62	10	10
IC	530.92	5	11
MOSFET	903.68	2	12
Choke	111.15	10	13
Photo-Couple	736.62	8	14
Thermistor	65.00	1	15
TOTAL	**7661.73**	**204**	
MTBF	**130518 HOURS**		

REFER DOCUMENT : MIL - HDBK 217F

CUSTOMER MTBF SPEC. : 125,000 Hours

ACTUAL MTBF : 130,518 Hours

JUDGE : OK

PREPARED : 張家祥 Feb,10'03 CHECK : ✓ APPROVED : 林慶揚 Feb.10'03

COMPONENT FAILURE RATE ANALYSIS

RESISTOR

Model NO. : PS-5251-2DFS INPUT : 230VAC OUTPUT : MAX LOAD AT : 25 ℃ REV. D Page 1

RATING				STRESS				$\lambda p = \lambda b * \pi E * \pi R * \pi Q * 1000$				
Location	TYPE	OHM	W(rate)	Vac(V)	Vdc(V)	Vrms(V)	Watt	λb	πE	πR	πQ	λP
R100	R.MO(S)	910K	.5	229.42	333.3m	229.42	57.8m	0.00078	1.0	1.100	5.0	4.28829
R120	R.CF	680K	.25	3.82	133.82	133.87	26.4m	0.00077	1.0	1.100	5.0	4.24057
R121	R.CF	680K	.25	3.8	131.47	131.52	25.4m	0.00077	1.0	1.100	5.0	4.22362
R122	R.CF(S)	1K	.25	4.89	2.97	5.72	32.7m	0.00079	1.0	1.000	5.0	3.96390
R123	R.MO	0.1	2	237.4m	107.2m	260.5m	678.5m	0.00100	1.0	1.000	5.0	4.97588
R124	R.MO(S)	1	.5	250.6m	128.1m	281.5m	79.2m	0.00082	1.0	1.000	5.0	4.08469
R125	R.MO(S)	1M	.5	8.32	250.13	250.27	62.6m	0.00079	1.0	1.100	5.0	4.33342
R126	R.MF	39K	.125	178.6m	10.52	10.52	2.8m	0.00070	1.0	1.000	5.0	3.52223
R129	R.MO(S)	1M	.5	3.14	142.84	142.87	20.4m	0.00072	1.0	1.100	5.0	3.95184
R200	R.MO(S)	10	.5	577.9m	0.0m	577.9m	33.4m	0.00074	1.0	1.000	5.0	3.69588
R201	R.MO(S)	10	.5	724.2m	0.7m	724.2m	52.4m	0.00077	1.0	1.000	5.0	3.85283
R202	R.CF	100	.125	23.4m	11.9m	26.2m	6.9u	0.00069	1.0	1.000	5.0	3.43620
R220	R.MO	47	1	2.3m	0.0m	2.3m	0.1u	0.00069	1.0	1.000	5.0	3.43600
R221	R.CF	100	.125	285.3m	12.4m	285.6m	815.5u	0.00069	1.0	1.000	5.0	3.46055
R223	R.MO(S)	330	1	3.9m	12.15	12.15	447.3m	0.00112	1.0	1.000	5.0	5.59915
R224	R.ZW	0.0050	30	78.3m	78.3m	110.8m	2.45	0.00075	1.0	1.000	5.0	3.75703
R250	R.CF	220	.1	34.7m	694.0m	694.9m	2.2m	0.00070	1.0	1.000	5.0	3.51931
R251	R.MO(S)	100	.5	28.0m	96.8m	100.8m	101.6u	0.00069	1.0	1.000	5.0	3.43676
R252	R.CF	1K	.125	10.4m	143.0m	143.3m	20.5u	0.00069	1.0	1.000	5.0	3.43661
R280	R.MO(S)	10	.5	639.6m	0.0m	639.6m	40.9m	0.00075	1.0	1.000	5.0	3.75702
R281	R.CF	100	.125	27.6m	5.5m	28.2m	7.9u	0.00069	1.0	1.000	5.0	3.43623
R282	R.MO(S)	30	1	3.8m	3.49	3.49	406.0m	0.00107	1.0	1.000	5.0	5.35212
R301	R.CF	1M	.125	100.5m	17.0m	101.9m	0.0u	0.00069	1.0	1.100	5.0	3.77960
R302	R.MF	12.4K	.125	438.5m	2.66	2.70	586.1u	0.00069	1.0	1.000	5.0	3.45363
R303	R.CF	10K	.1	69.2m	1.12	1.12	125.9u	0.00069	1.0	1.000	5.0	3.44072
TOTAL												**98.4341**

COMPONENT FAILURE RATE ANALYSIS

RESISTOR

Model NO. : PS-5251-2DFS INPUT : 230VAC OUTPUT : MAX LOAD AT : 25 ℃ REV. D Page 2												
RATING				STRESS				$\lambda p = \lambda b * \pi E * \pi R * \pi Q * 1000$				
Location	TYPE	OHM	W(rate)	Vac(V)	Vdc(V)	Vrms(V)	Watt	λb	πE	πR	πQ	λP
R304	R.CF	10K	.125	299.3m	1.96	1.98	393.1u	0.00069	1.0	1.000	5.0	3.44781
R305	R.CF	330	.1	169.5m	1.96	1.97	11.7m	0.00078	1.0	1.000	5.0	3.90528
R306	R.CF	39K	.125	5.33	3.15	6.19	982.9u	0.00069	1.0	1.000	5.0	3.46561
R307	R.CF	3K	.125	251.1m	12.81	12.81	54.7m	0.00111	1.0	1.000	5.0	5.54088
R308	R.CF	20	.1	560.1m	85.1m	566.5m	16.0m	0.00082	1.0	1.000	5.0	4.09378
R309	R.CF	1K	.125	553.4m	118.9m	566.0m	320.4u	0.00069	1.0	1.000	5.0	3.44562
R3101	R.CF	1.3K	.1	56.2m	787.6m	789.6m	479.6u	0.00069	1.0	1.000	5.0	3.45403
R311	R.CF	1K	.1	373.4m	0.1m	373.4m	139.4u	0.00069	1.0	1.000	5.0	3.44123
R3121	R.CF	10000	.1	68.3m	2.26	2.26	511.2u	0.00069	1.0	1.000	5.0	3.45522
R3122	R.CF	39K	.1	50.8m	1.61	1.61	66.5u	0.00069	1.0	1.000	5.0	3.43849
R313	R.CF	110	.1	358.6m	271.3m	449.6m	1.8m	0.00070	1.0	1.000	5.0	3.50563
R314	R.CF	1K	.1	351.0m	3.67	3.69	13.6m	0.00080	1.0	1.000	5.0	3.98555
R315	R.CF	10	.1	19.7m	35.1m	40.3m	162.5u	0.00069	1.0	1.000	5.0	3.44210
R330	R.CF	100	.1	36.5m	333.8m	335.8m	1.1m	0.00070	1.0	1.000	5.0	3.47854
R331	R.CF	10	.1	15.2m	89.1m	90.4m	816.9u	0.00069	1.0	1.000	5.0	3.46677
R332	R.MF	866	.1	26.0m	916.7m	917.0m	971.1u	0.00069	1.0	1.000	5.0	3.47261
R333	R.CF	20K	.1	115.2m	0.1m	115.2m	0.7u	0.00069	1.0	1.000	5.0	3.43602
R334	R.MF	2.49K	.1	47.1m	2.49	2.49	2.5m	0.00071	1.0	1.000	5.0	3.53070
R340	R.MF	10K	.1	21.9m	0.0m	21.9m	0.0u	0.00069	1.0	1.000	5.0	3.43600
R400	R.CF	200	.1	27.3m	824.2m	824.6m	3.4m	0.00071	1.0	1.000	5.0	3.56592
R401	R.MO	33K	.1	641.5m	19.99	20.00	12.1m	0.00078	1.0	1.000	5.0	3.92208
R402	R.CF	6.2K	.25	689.9m	22.53	22.54	81.9m	0.00098	1.0	1.000	5.0	4.91414
R410	R.MF	523	.125	33.5m	72.2m	79.6m	12.1u	0.00069	1.0	1.000	5.0	3.43636
R411	R.MF	75K	.1	101.4m	4.92	4.92	322.9u	0.00069	1.0	1.000	5.0	3.44813
R412	R.CF	620	.1	20.3m	15.2m	25.4m	1.0u	0.00069	1.0	1.000	5.0	3.43604
TOTAL												92.16455

COMPONENT FAILURE RATE ANALYSIS

RESISTOR

Model NO. : PS-5251-2DFS	INPUT : 230VAC	OUTPUT : MAX LOAD AT : 25 ℃									REV. D	Page 3
RATING				STRESS				$\lambda p = \lambda b * \pi E * \pi R * \pi Q * 1000$				
Location	TYPE	OHM	W(rate)	Vac(V)	Vdc(V)	Vrms(V)	Watt	λb	πE	πR	πQ	λP
R413	R.CF	100K	.1	31.0m	3.52	3.52	123.9u	0.00069	1.0	1.100	5.0	3.78471
R415	R.CF	100K	.1	35.1m	12.16	12.16	1.5m	0.00070	1.0	1.100	5.0	3.84110
R416	R.CF	1K	.1	40.4m	638.6m	639.9m	409.4u	0.00069	1.0	1.000	5.0	3.45139
R417	R.CF	6.8K	.1	53.3m	14.78	14.78	32.1m	0.00098	1.0	1.000	5.0	4.87919
R500	R.MO(S)	1	.5	44.1m	44.4m	62.6m	3.9m	0.00069	1.0	1.000	5.0	3.46555
R503	R.CF	10K	.125	209.8m	12.57	12.57	15.8m	0.00079	1.0	1.000	5.0	3.94451
R504	R.CF	1.5M	.25	10.33	123.33	123.76	10.2m	0.00072	1.0	1.600	5.0	5.74826
R510	R.CF	1.5M	.25	17.32	122.9	124.11	10.3m	0.00072	1.0	1.600	5.0	5.74972
R531	R.MF	200	.1	8.5m	998.0m	998.0m	5.0m	0.00073	1.0	1.000	5.0	3.62795
R580	R.CF	750	.1	16.6m	783.6m	783.8m	819.2u	0.00069	1.0	1.000	5.0	3.46686
R581	R.CF	560	.1	1.5m	245.0m	245.0m	107.2u	0.00069	1.0	1.000	5.0	3.44002
R632	R.CF	47	.125	11.0m	78.0m	78.7m	131.9u	0.00069	1.0	1.000	5.0	3.43996
R633	R.CF	10K	.125	4.9m	2.49	2.49	620.0u	0.00069	1.0	1.000	5.0	3.45465
R634	R.CF	10K	.125	8.0m	2.51	2.51	630.0u	0.00069	1.0	1.000	5.0	3.45495
R636	R.CF	1K	.125	17.9m	985.6m	985.7m	971.7u	0.00069	1.0	1.000	5.0	3.46528
R640	R.MF	5.11K	.1	8.5m	4.85	4.85	4.6m	0.00072	1.0	1.000	5.0	3.61306
VR301	R.VR	100K	.1	58.4m	1.52	1.52	23.1u	0.00069	1.0	1.100	5.0	3.78055
VR401	R.VR	500	.1	0.7m	22.5m	22.6m	1.0u	0.00069	1.0	1.000	5.0	3.43603
TOTAL												**70.04372**

COMPONENT FAILURE RATE ANALYSIS

CAPACITOR

Model NO. : PS-5251-2DFS INPUT : 230VAC OUTPUT : MAX LOAD AT : 25 ℃ REV. D Page 4									
RATING				STRESS	$\lambda p = \lambda b * \pi E * \pi Q * \pi CV * 1000$				
Location	TYPE	CAP.	V(rate)	V	λb	πE	πQ	πCV	λP
C100	ELE	22uF	50	25.00	0.02393	1.0	3.000	0.593	42.58621
C101	MEX	0.22UF	400	325.00	0.03862	1.0	10.000	0.967	373.50880
C102	MEX	0.33UF	400	226.17	0.00721	1.0	10.000	1.001	72.19215
C103	DIS	1000PF	400	106.46	0.00108	1.0	3.000	0.877	2.83273
C104	DIS	1000PF	400	117.59	0.00134	1.0	3.000	0.877	3.52005
C105	DIS	470PF	400	282.81	0.00972	1.0	3.000	0.807	23.51670
C106	DIS	470PF	400	282.81	0.00972	1.0	3.000	0.807	23.51670
C108	DIS	2200PF	400	82.81	0.00092	1.0	3.000	0.956	2.62787
C120	ELE	680UF	200	157.81	0.05900	1.0	3.000	1.100	194.67500
C121	ELE	680UF	200	170.31	0.07109	1.0	3.000	1.100	234.55000
C122	DIS	0.01UF	500	278.13	0.00509	1.0	3.000	1.129	17.23006
C123	DIS	470PF	1000	226.56	0.00099	1.0	3.000	0.807	2.38790
C124	DIS	0.01UF	500	328.13	0.00791	1.0	3.000	1.129	26.79303
C125	MON	0.01UF	50	12.50	0.00109	1.0	3.000	1.129	3.68837
C200	MON	4700PF	50	28.75	0.00510	1.0	3.000	1.039	15.90182
C201	PEI	4700PF	100	41.88	0.00245	1.0	10.000	0.697	17.09537
C202	ELE	2200UF	10	6.06	0.03327	1.0	3.000	1.359	135.62510
C203	ELE	2200UF	10	5.38	0.02688	1.0	3.000	1.359	109.54780
C205	ELE	10UF	50	593.8m	0.01197	1.0	3.000	0.515	18.47603
C206	MON	0.22UF	50	24.38	0.00365	1.0	3.000	1.587	17.37625
C220	MON	1000PF	100	56.25	0.00482	1.0	3.000	0.877	12.66327
C222	ELE	10UF	50	281.3m	0.01197	1.0	3.000	0.515	18.47581
C223	ELE	2200UF	16	12.66	0.05940	1.0	3.000	1.359	242.09670
C224	ELE	220UF	25	14.69	0.03139	1.0	3.000	0.898	84.53716
C230	ELE	470UF	16	12.75	0.06041	1.0	3.000	1.029	186.51600
TOTAL									1881.937

COMPONENT FAILURE RATE ANALYSIS

CAPACITOR

Model NO. : PS-5251-2DFS INPUT : 230VAC OUTPUT : MAX LOAD AT : 25 ℃ REV. D Page 5

RATING				STRESS	$\lambda p = \lambda b * \pi E * \pi Q * \pi CV * 1000$				
Location	TYPE	CAP.	V(rate)	V	λb	πE	πQ	πCV	λP
C233	ELE	47uF	50	12.06	0.01331	1.0	3.000	0.680	27.15104
C280	PEI	4700PF	100	22.81	0.00115	1.0	10.000	0.697	8.02702
C281	ELE	3300UF	6.3	3.50	0.02838	1.0	3.000	1.462	124.45230
C282	ELE	4700UF	6.3	3.50	0.02838	1.0	3.000	1.558	132.63190
C283	ELE	10UF	50	531.3m	0.01197	1.0	3.000	0.515	18.47596
C301	MON	0.1UF	50	1.56	0.00069	1.0	3.000	1.455	3.01316
C302	MON	0.1UF	50	6.56	0.00075	1.0	3.000	1.455	3.26152
C304	MON	1000PF	100	2.03	0.00069	1.0	3.000	0.877	1.81413
C305	MON	0.022UF	50	5.16	0.00072	1.0	3.000	1.232	2.65173
C306	MON	470PF	50	4.22	0.00065	1.0	3.000	0.807	1.56927
C307	ELE	4.7UF	50	5.94	0.01213	1.0	3.000	0.449	16.34433
C3101	MON	1000PF	50	3.25	0.00064	1.0	3.000	0.877	1.68499
C3102	ELE	10UF	50	18.13	0.01653	1.0	3.000	0.515	25.52233
C311	MON	0.1UF	25	3.13	0.00074	1.0	3.000	1.455	3.22854
C312	MON	0.1UF	25	9.69	0.00218	1.0	3.000	1.455	9.50092
C313	MON	0.1UF	50	109.4m	0.00069	1.0	3.000	1.455	3.00977
C330	MON	0.47UF	16	3.44	0.00094	1.0	3.000	1.725	4.88178
C331	MON	100PF	50	328.1m	0.00063	1.0	3.000	0.680	1.29481
C332	MON	0.1UF	25	171.9m	0.00069	1.0	3.000	1.455	3.00981
C340	MON	0.1UF	50	1.34	0.00069	1.0	3.000	1.455	3.01192
C400	ELE	6.8UF	50	8.13	0.01238	1.0	3.000	0.480	17.82951
C401	ELE	2.2UF	50	4.84	0.01205	1.0	3.000	0.392	14.17030
C402	MON	1000PF	50	5.00	0.00066	1.0	3.000	0.877	1.72980
C403	MON	0.1UF	25	265.6m	0.00063	1.0	3.000	1.455	2.76835
C404	MON	0.1UF	25	468.8m	0.00063	1.0	3.000	1.455	2.76890
TOTAL									**433.804**

COMPONENT FAILURE RATE ANALYSIS

CAPACITOR

Model NO. : PS-5251-2DFS INPUT : 230VAC OUTPUT : MAX LOAD AT : 25 ℃ REV. D Page 6									
RATING				STRESS	$\lambda p = \lambda b * \pi E * \pi Q * \pi CV * 1000$				
Location	TYPE	CAP.	V(rate)	V	λb	πE	πQ	πCV	λP
C416	MON	0.1UF	25	5.06	0.00090	1.0	3.000	1.455	3.93405
C417	MON	0.1UF	25	4.44	0.00083	1.0	3.000	1.455	3.63423
C418	MON	0.1UF	25	4.94	0.00089	1.0	3.000	1.455	3.86984
C419	MON	0.1UF	25	5.44	0.00095	1.0	3.000	1.455	4.15832
C501	ELE	100UF	35	20.31	0.03068	1.0	3.000	0.779	71.67802
C502	MON	0.1UF	50	15.94	0.00152	1.0	3.000	1.455	6.62158
C503	ELE	1000UF	10	6.00	0.03265	1.0	3.000	1.179	115.46420
C504	ELE	470UF	10	5.94	0.03203	1.0	3.000	1.029	98.89548
C505	ELE	100UF	25	20.00	0.06099	1.0	3.000	0.779	142.50570
C509	MON	0.1UF	25	2.34	0.00065	1.0	3.000	1.455	2.85230
C510	ELE	1000UF	10	5.88	0.03143	1.0	3.000	1.179	111.16300
C510S	MON	0.47UF	16	843.8m	0.00069	1.0	3.000	1.725	3.58771
C511	MON	1UF	25	3.13	0.00068	1.0	3.000	1.874	3.82537
C511S	DIS	0.01UF	1000	19.69	0.00063	1.0	3.000	1.129	2.14943
C512	MON	1UF	25	13.75	0.00454	1.0	3.000	1.874	25.54100
C531	ELE	22UF	50	4.88	0.01206	1.0	3.000	0.593	21.45148
C580	ELE	47UF	25	5.31	0.01288	1.0	3.000	0.680	26.28198
C600	ELE	2.2UF	50	4.41	0.01203	1.0	3.000	0.392	14.14544
C631	MON	0.1UF	50	3.81	0.00064	1.0	3.000	1.455	2.81359
TOTAL									**664.5728**

COMPONENT FAILURE RATE ANALYSIS

DIODE

Model NO. : PS-5251-2DFS INPUT : 230VAC OUTPUT : MAX LOAD AT : 25 ℃ REV. D Page 7

RATING						STRESS			$\lambda p = \lambda b * \pi E * \pi Q * \pi T * \pi S * \pi C * 1000$						
Location	P/N	TYPE	V(rate)	If(A)	Tj(℃)	Vr(V)	If(A)	Tj(℃)	λb	πE	πQ	πT	πS	πC	λP
D100	GBU808	BRIDGE	800	8	150	325.00	1.35	49.4	0.00500	1.0	5.5	2.190	0.112	1.0	6.74901
D102	1N4007	GENERAL	1000	1	175	1.94	476.3u	40.1	0.00380	1.0	5.5	1.651	0.054	1.0	1.86352
D103	1N4007	GENERAL	1000	1	175	4.06	296.0u	43.3	0.00380	1.0	5.5	1.824	0.054	1.0	2.05825
D120	BYV-26E	GENERAL	1000	1	175	643.75	-123.2m	51.2	0.00380	1.0	5.5	2.310	0.343	1.0	16.55578
D200	MBR3045CT	SCHOTTKY	45	30	150	31.38	10.71	70.1	0.00300	1.0	5.5	3.909	0.416	1.0	26.86163
D201	MBR3045PT	SCHOTTKY	45	30	150	31.88	10.87	63.9	0.00300	1.0	5.5	3.308	0.433	1.0	23.62392
D202	BAV20	GENERAL	200	.25	175	26.25	8.1m	58.6	0.00380	1.0	5.5	2.864	0.054	1.0	3.23188
D220	MBR20100CT	SCHOTTKY	100	20	150	65.63	6.49	62.2	0.00300	1.0	5.5	3.164	0.359	1.0	18.76459
D231	UG2D	FR	200	2	150	154.69	763.2m	81.2	0.06900	1.0	5.5	5.188	0.536	1.0	1054.72500
D250	1N4937	FR	600	1	150	24.53	-3.6m	43.4	0.06900	1.0	5.5	1.827	0.054	1.0	37.43233
D251	ERB91-02	FR	200	1	150	43.13	8.0m	43.6	0.06900	1.0	5.5	1.839	0.054	1.0	37.68203
D280	MBR3045PT	SCHOTTKY	45	30	150	33.13	5.98	69.8	0.00300	1.0	5.5	3.882	0.475	1.0	30.43317
D284	1N4002	GENERAL	100	1	175	1.94	-1.1m	48.4	0.00380	1.0	5.5	2.130	0.054	1.0	2.40377
D301	1N4148	GENERAL	75	.2	200	1.94	-197.2u	28.3	0.00380	1.0	5.5	1.122	0.054	1.0	1.26642
D302	RLS4148	GENERAL	75	.2	200	5.25	-232.4u	30.1	0.00380	1.0	5.5	1.191	0.054	1.0	1.34382
D303	1N4148	GENERAL	75	.2	200	562.5m	-29.2u	28.9	0.00380	1.0	5.5	1.144	0.054	1.0	1.29073
D304	RLS4148	GENERAL	75	.2	200	5.69	-262.1u	29.9	0.00380	1.0	5.5	1.183	0.054	1.0	1.33480
D305	RLS4148	GENERAL	75	.2	200	5.00	3.4m	38.6	0.00380	1.0	5.5	1.573	0.054	1.0	1.77500
D502	1N4937	FR	600	1	150	425.00	37.3m	51.3	0.06900	1.0	5.5	2.322	0.433	1.0	381.12930
D503	ERB91-02	FR	200	1	150	71.88	3.4m	48.9	0.06900	1.0	5.5	2.163	0.083	1.0	68.26997
D504	BAV20	GENERAL	200	.25	175	95.31	-26.3m	43.8	0.00380	1.0	5.5	1.852	0.165	1.0	6.39185
D505	SB360	SCHOTTKY	60	3	150	34.06	1.40	67.0	0.00300	1.0	5.5	3.597	0.253	1.0	14.99445
D531	1N4002	GENERAL	100	1	175	11.56	4.7m	39.8	0.00380	1.0	5.5	1.635	0.054	1.0	1.84497
ZD120	1N4744A	ZENER	15.75	.061	200	13.75	12.6m	66.2	0.00200	1.0	5.5	2.190	1.000	1.0	24.08842
ZD123	1N4734A	ZENER	5.6	1	200	3.56	53.5m	42.1	0.00200	1.0	5.5	1.420	1.000	1.0	15.61469
TOTAL															**1781.730**

COMPONENT FAILURE RATE ANALYSIS

DIODE

Model NO. : PS-5251-2DFS INPUT : 230VAC OUTPUT : MAX LOAD AT : 25 ℃ REV. D Page 8															
RATING						STRESS			$\lambda p = \lambda b * \pi E * \pi Q * \pi T * \pi S * \pi C * 1000$						
Location	P/N	TYPE	V(rate)	If(A)	Tj(℃)	Vr(V)	If(A)	Tj(℃)	λb	πE	πQ	πT	πS	πC	λP
ZD400	RD12EB3	ZENER	12.3	.2	175	8.44	383.8u	38.7	0.00200	1.0	5.5	1.327	1.000	1.0	14.60237
ZD502	ERD5.1EB2	ZENER	5.18	.096	175	5.16	2.4m	41.6	0.00200	1.0	5.5	1.407	1.000	1.0	15.47963
ZD503	RD15EB3	ZENER	15.02	.033	175	10.16	2.1m	54.3	0.00200	1.0	5.5	1.783	1.000	1.0	19.60951
ZD531	RD11EB3	ZENER	11.26	.044	175	1.31	126.4m	86.3	0.00200	1.0	5.5	3.009	1.000	1.0	33.09634
TOTAL															82.78786

COMPONENT FAILURE RATE ANALYSIS

TRANSFORMER

Model NO. : PS-5251-2DFS INPUT : 230VAC OUTPUT : MAX LOAD AT : 25 ℃ REV. D Page 9							
RATING			**STRESS**	**$\lambda p = \lambda b * \pi E * \pi Q * 1000$**			
Location	MAKER	TYPE	Ths(℃)	λb	πE	πQ	λP
T120	LITON	ERL-35 PC40	61.4	0.00326	1.0	30.0	97.73145
T501	LITON	EE-19 PC40	45.0	0.00255	1.0	30.0	76.38297
TOTAL							**174.1144**

COMPONENT FAILURE RATE ANALYSIS

TRANSISTOR

Model NO. : PS-5251-2DFS INPUT : 230VAC OUTPUT : MAX LOAD AT : 25 ℃ REV. D Page 10

RATING					STRESS			$\lambda p = \lambda b * \pi R * \pi Q * \pi A * \pi S * \pi T * \pi E * 1000$							
Location	P/N	Vce(rate)(V)	Ie(A)	Tj(℃)	Vce(V)	Ie(A)	Tj(℃)	λb	πR	πQ	πA	πS	πT	πE	λP
Q121	MPSA42	300	.5	150	140.63	5.2m	168.3	0.00074	0.840	8.0	0.700	0.192	10.007	1.0	6.70674
Q122	MPSA92	300	.5	150	146.88	1.3m	60.1	0.00074	0.840	8.0	0.700	0.205	2.112	1.0	1.51002
Q251	KSA916Y	120	.8	150	29.38	8.7m	42.4	0.00074	0.962	8.0	0.700	0.096	1.480	1.0	0.56710
Q301	2SC1815	50	.15	125	5.31	1.4m	31.3	0.00074	0.712	8.0	1.500	0.063	1.159	1.0	0.45863
Q302	KSR2202	50	.1	150	6.25	646.5u	27.8	0.00074	0.641	8.0	0.700	0.066	1.068	1.0	0.18800
Q303	2SA1015	50	.15	150	4.06	56.2m	36.2	0.00074	0.712	8.0	0.700	0.058	1.293	1.0	0.22093
Q311	KST2907A	60	.6	150	390.6m	4.5m	35.1	0.00074	0.678	8.0	1.500	0.046	1.261	1.0	0.34870
Q314	KST2222A	40	.6	150	265.6m	1.4m	39.0	0.00074	0.678	8.0	0.700	0.046	1.374	1.0	0.17733
Q531	KSA916Y	120	.8	150	8.59	1.6m	33.7	0.00074	0.962	8.0	0.700	0.056	1.224	1.0	0.27401
Q580	KST2907A	60	.6	150	2.28	2.8m	31.1	0.00074	0.678	8.0	0.700	0.051	1.153	1.0	0.16401
TOTAL															**10.61549**

COMPONENT FAILURE RATE ANALYSIS

IC

Model NO. : PS-5251-2DFS INPUT : 230VAC OUTPUT : MAX LOAD AT : 25 ℃ REV. D Page 11

RATING						STRESS			$\lambda p = (C1 * \pi T + C2 * \pi E) * \pi Q * \pi L * 1000$						
Location	MAKER	TYPE	Vcc(V)	I(A)	Tj(℃)	Vcc(V)	I(A)	Tj(℃)	π Q	C1	π T	C2	π E	π L	λ P
IC230	STM	7912ACV	35	1.5	125	2.97	959.3m	68.2	10.0	.01	2.472	0.001	.5	1.000	253.13980
IC511	SAMSU	KA431AZ	37	.15	150	11.25	1.4m	39.2	10.0	.01	0.315	0.001	.5	1.000	37.44527
IC600	SAMSU	KA431AZ	37	.15	150	6.06	26.6m	28.1	10.0	.01	0.130	0.001	.5	1.000	18.85442
IC300	MOTOR	UC3845BN	30	1	150	17.50	57.3m	61.8	10.0	.01	1.610	0.003	.5	1.000	178.02950
IC400	STM	TSM111CN	36	.03	150	19.69	6.1m	42.1	10.0	.01	0.396	0.001	.5	1.000	43.45405
TOTAL															**530.923**

COMPONENT FAILURE RATE ANALYSIS

MOSFET

Model NO. : PS-5251-2DFS INPUT : 230VAC OUTPUT : MAX LOAD AT : 25 ℃ REV. D Page 12															
RATING							STRESS			$\lambda p = \lambda b * \pi E * \pi Q * \pi T * \pi A * 1000$					
Location	MAKER	TYPE	Vds(V)	Id(A)	Pr(W)	Tj(℃)	Vds(V)	Id(A)	Tj(℃)	λb	πE	πQ	πT	πA	λP
IC501	POWER	TNY267P	700	.4	0	150	506.25	124.5m	34.5	.012	1.0	5.5	1.221	0.700	56.38897
Q120	TOSHB	2SK2611	900	9	150	150	668.75	2.07	48.5	.012	1.0	5.5	1.605	8.000	847.29230
TOTAL															**903.6813**

COMPONENT FAILURE RATE ANALYSIS

CHOKE

Model NO. : PS-5251-2DFS INPUT : 230VAC OUTPUT : MAX LOAD AT : 25 ℃ REV. D Page 13								
RATING			STRESS	$\lambda p = \lambda b * \pi E * \pi Q * \pi C * 1000$				
Location	MAKER	TYPE	Ths(℃)	λb	πE	πQ	πC	λP
L100	LITON	EEL-25	34.9	0.00044	1.0	20.0	1.0	8.83767
L101	LITON	TR18*10*10	44.5	0.00048	1.0	20.0	1.0	9.59410
L102	LITON	EE43*35	47.9	0.00050	1.0	20.0	1.0	9.96587
L200	LITON	T106-52	55.5	0.00055	1.0	20.0	1.0	11.07984
L201	LITON	R4*10	55.5	0.00055	1.0	20.0	1.0	11.07984
L210	LITEON	R5*25	29.8	0.00043	1.0	20.0	1.0	8.56120
L280	LITON	MAG AMP W760	59.4	0.00059	1.0	20.0	1.0	11.87542
L281	LITON	T68-52D	78.0	0.00099	1.0	20.0	1.0	19.83073
L282	LITON	R4*10	50.7	0.00052	1.0	20.0	1.0	10.33321
L501	LITON	DR6*8.3	48.1	0.00050	1.0	20.0	1.0	9.99219
TOTAL								**111.1501**

COMPONENT FAILURE RATE ANALYSIS

PHOTO-COUPLE

Model NO. : PS-5251-2DFS INPUT : 230VAC OUTPUT : MAX LOAD AT : 25 ℃ REV. D Page 14

RATING							STRESS			$\lambda p = \lambda b * \pi E * \pi Q * \pi T * 1000$				
Location	MAKER	P/N	TYPE	Vr(V)	If(A)	Tj(℃)	Vr(V)	If(A)	Tj(℃)	λb	πE	πQ	πT	λP
PC301	LITON	LTV817B	TRANSISTOR	35	.05	125	3.50	5.8m	58.3	0.00550	1.0	8.0	2.560	112.62730
PC3012	LITON	LTV817B	DIODE	6	.05	125	1.42	5.5m	55.3	0.00400	1.0	8.0	2.370	75.84783
PC401	LITON	LTV817B	TRANSISTOR	35	.05	125	1.56	16.5m	47.4	0.00550	1.0	8.0	1.926	84.73634
PC4012	LITON	LTV817B	DIODE	6	.05	125	1.94	25.2m	52.2	0.00400	1.0	8.0	2.190	70.07500
PC501	LITON	LTV817B	TRANSISTOR	35	.05	125	1.75	834.0u	56.2	0.00550	1.0	8.0	2.426	106.75840
PC5012	LITON	LTV817B	DIODE	6	.05	125	1.31	9.4m	61.1	0.00400	1.0	8.0	2.751	88.02850
PC502	LITON	LTV817B	TRANSISTOR	35	.05	125	10.63	6.1m	59.8	0.00550	1.0	8.0	2.665	117.25620
PC5022	LITON	LTV817B	DIODE	6	.05	125	1.47	4.8m	58.0	0.00400	1.0	8.0	2.540	81.29145
TOTAL														**736.621**

COMPONENT FAILURE RATE ANALYSIS

THERMISTOR

Model NO. : PS-5251-2DFS INPUT : 230VAC OUTPUT : MAX LOAD AT : 25 ℃ REV. D Page 15						
RATING			**$\lambda p = \lambda b * \pi E * \pi Q * 1000$**			
Location	MAKER	TYPE	λb	πE	πQ	λP
RT531	THINK	SCK-103	.065	1.0	1.0	65.00000
TOTAL						**65.000**

PS-5251-2DFS MTBF REPORT LIST REV. D 01-30-2003			
COMPONENT	**FAILURE RATE**	**Q'TY**	**PAGE NO.**
Resistor	263.46	68	1, 2, 3
Capacitor	2666.83	69	4, 5, 6
Diode	1994.67	29	7, 8
Transformer	172.72	2	9
Transistor	53.31	10	10
IC	642.14	5	11
MOSFET	895.26	2	12
Choke	96.68	10	13
Photo-Couple	755.56	8	14
Thermistor	65.00	1	15
TOTAL	**7605.62**	**204**	
MTBF	**131481**	**HOURS**	

REFER DOCUMENT : MIL - HDBK 217F

CUSTOMER MTBF SPEC. : 125,000 Hours

ACTUAL MTBF : 131,481 Hours.

JUDGE : OK

PREPARED : 張育萍 Feb,10 '03 CHECK : 2 APPROVED : 林廣瑞 Feb.10 '03

COMPONENT FAILURE RATE ANALYSIS

RESISTOR

Model NO. : PS-5251-2DFS	INPUT : 115VAC	OUTPUT : MAX LOAD AT : 25 ℃									REV. D	Page 1
RATING				STRESS				λp = λb* πE* πR* πQ*1000				
Location	TYPE	OHM	W(rate)	Vac(V)	Vdc(V)	Vrms(V)	Watt	λb	πE	πR	πQ	λP
R100	R.MO(S)	910K	.5	113.82	2.1m	113.82	14.2m	0.00071	1.0	1.100	5.0	3.89891
R120	R.CF	680K	.25	7.76	148.5	148.70	32.5m	0.00079	1.0	1.100	5.0	4.35621
R121	R.CF	680K	.25	7.81	148.39	148.60	32.5m	0.00079	1.0	1.100	5.0	4.35532
R122	R.CF(S)	1K	.25	4.75	2.63	5.43	29.5m	0.00078	1.0	1.000	5.0	3.90799
R123	R.MO	0.1	2	241.5m	113.2m	266.7m	711.4m	0.00101	1.0	1.000	5.0	5.06605
R124	R.MO(S)	1	.5	249.6m	124.4m	278.9m	77.8m	0.00081	1.0	1.000	5.0	4.07198
R125	R.MO(S)	1M	.5	7.13	282.97	283.06	80.1m	0.00082	1.0	1.100	5.0	4.50207
R126	R.MF	39K	.125	173.3m	11.81	11.81	3.6m	0.00071	1.0	1.000	5.0	3.54502
R129	R.MO(S)	1M	.5	9.05	135.96	136.26	18.6m	0.00072	1.0	1.100	5.0	3.93595
R200	R.MO(S)	10	.5	585.5m	0.0m	585.5m	34.3m	0.00074	1.0	1.000	5.0	3.70305
R201	R.MO(S)	10	.5	1.06	0.6m	1.06	112.4m	0.00088	1.0	1.000	5.0	4.39122
R202	R.CF	100	.125	24.4m	11.9m	27.1m	7.3u	0.00069	1.0	1.000	5.0	3.43622
R220	R.MO	47	1	2.4m	0.0m	2.4m	0.1u	0.00069	1.0	1.000	5.0	3.43600
R221	R.CF	100	.125	292.3m	12.3m	292.5m	855.8u	0.00069	1.0	1.000	5.0	3.46177
R223	R.MO(S)	330	1	1.1	12.14	12.19	450.3m	0.00112	1.0	1.000	5.0	5.61709
R224	R.ZW	0.0050	30	178.3m	78.3m	194.8m	7.59	0.00091	1.0	1.000	5.0	4.52863
R250	R.CF	220	.1	38.2m	691.4m	692.5m	2.2m	0.00070	1.0	1.000	5.0	3.51873
R251	R.MO(S)	100	.5	26.7m	96.3m	99.9m	99.8u	0.00069	1.0	1.000	5.0	3.43674
R252	R.CF	1K	.125	12.4m	143.3m	143.8m	20.7u	0.00069	1.0	1.000	5.0	3.43662
R280	R.MO(S)	10	.5	1.08	-0.4m	1.08	116.6m	0.00089	1.0	1.000	5.0	4.43244
R281	R.CF	100	.125	27.6m	5.5m	28.1m	7.9u	0.00069	1.0	1.000	5.0	3.43623
R282	R.MO(S)	30	1	3.7m	3.48	3.48	403.7m	0.00107	1.0	1.000	5.0	5.33856
R301	R.CF	1M	.125	212.8m	16.5m	213.4m	0.0u	0.00069	1.0	1.100	5.0	3.77960
R302	R.MF	12.4K	.125	442.7m	2.66	2.70	586.4u	0.00069	1.0	1.000	5.0	3.45364
R303	R.CF	10K	.1	59.8m	959.1m	961.0m	92.3u	0.00069	1.0	1.000	5.0	3.43946
TOTAL												100.4855

COMPONENT FAILURE RATE ANALYSIS

RESISTOR

Model NO. : PS-5251-2DFS	INPUT : 115VAC	OUTPUT : MAX LOAD AT : 25 ℃										REV. D Page 2
RATING				STRESS				$\lambda p = \lambda b * \pi E * \pi R * \pi Q * 1000$				
Location	TYPE	OHM	W(rate)	Vac(V)	Vdc(V)	Vrms(V)	Watt	λb	πE	πR	πQ	λP
R304	R.CF	10K	.125	364.5m	2.0	2.03	413.3u	0.00069	1.0	1.000	5.0	3.44842
R305	R.CF	330	.1	208.1m	2.01	2.02	12.4m	0.00079	1.0	1.000	5.0	3.93291
R306	R.CF	39K	.125	5.21	2.82	5.92	899.9u	0.00069	1.0	1.000	5.0	3.46310
R307	R.CF	3K	.125	295.9m	12.82	12.82	54.8m	0.00111	1.0	1.000	5.0	5.54541
R308	R.CF	20	.1	608.8m	83.3m	614.5m	18.9m	0.00084	1.0	1.000	5.0	4.22247
R309	R.CF	1K	.125	731.6m	107.1m	739.4m	546.7u	0.00069	1.0	1.000	5.0	3.45244
R3101	R.CF	1.3K	.1	51.8m	788.3m	790.0m	480.1u	0.00069	1.0	1.000	5.0	3.45405
R311	R.CF	1K	.1	459.7m	0.1m	459.7m	211.4u	0.00069	1.0	1.000	5.0	3.44393
R3121	R.CF	10000	.1	80.4m	2.26	2.26	511.4u	0.00069	1.0	1.000	5.0	3.45523
R3122	R.CF	39K	.1	43.1m	1.61	1.61	66.5u	0.00069	1.0	1.000	5.0	3.43849
R313	R.CF	110	.1	393.0m	258.8m	470.6m	2.0m	0.00070	1.0	1.000	5.0	3.51233
R314	R.CF	1K	.1	372.2m	3.68	3.70	13.7m	0.00080	1.0	1.000	5.0	3.98942
R315	R.CF	10	.1	19.3m	34.4m	39.4m	155.2u	0.00069	1.0	1.000	5.0	3.44182
R330	R.CF	100	.1	47.6m	332.2m	335.6m	1.1m	0.00070	1.0	1.000	5.0	3.47851
R331	R.CF	10	.1	15.6m	89.1m	90.5m	818.7u	0.00069	1.0	1.000	5.0	3.46684
R332	R.MF	866	.1	41.5m	916.1m	917.1m	971.2u	0.00069	1.0	1.000	5.0	3.47261
R333	R.CF	20K	.1	124.3m	0.0m	124.3m	0.8u	0.00069	1.0	1.000	5.0	3.43602
R334	R.MF	2.49K	.1	42.1m	2.49	2.49	2.5m	0.00071	1.0	1.000	5.0	3.53070
R340	R.MF	10K	.1	22.2m	0.0m	22.2m	0.0u	0.00069	1.0	1.000	5.0	3.43600
R400	R.CF	200	.1	29.5m	826.0m	826.5m	3.4m	0.00071	1.0	1.000	5.0	3.56653
R401	R.MO	33K	.1	458.7m	22.6	22.60	15.5m	0.00081	1.0	1.000	5.0	4.06871
R402	R.CF	6.2K	.25	561.0m	22.52	22.53	81.8m	0.00098	1.0	1.000	5.0	4.91202
R410	R.MF	523	.125	109.3m	72.2m	131.0m	32.8u	0.00069	1.0	1.000	5.0	3.43698
R411	R.MF	75K	.1	280.3m	4.92	4.93	323.8u	0.00069	1.0	1.000	5.0	3.44816
R412	R.CF	620	.1	47.0m	15.1m	49.4m	3.9u	0.00069	1.0	1.000	5.0	3.43614
TOTAL												92.48924

COMPONENT FAILURE RATE ANALYSIS

RESISTOR

Model NO. : PS-5251-2DFS INPUT : 115VAC OUTPUT : MAX LOAD AT : 25 ℃ REV. D Page 3

RATING				STRESS				$\lambda p = \lambda b * \pi E * \pi R * \pi Q * 1000$				
Location	TYPE	OHM	W(rate)	Vac(V)	Vdc(V)	Vrms(V)	Watt	λb	πE	πR	πQ	λP
R413	R.CF	100K	.1	59.4m	3.52	3.52	123.9u	0.00069	1.0	1.100	5.0	3.78471
R415	R.CF	100K	.1	47.1m	12.15	12.15	1.5m	0.00070	1.0	1.100	5.0	3.84100
R416	R.CF	1K	.1	104.5m	636.7m	645.2m	416.3u	0.00069	1.0	1.000	5.0	3.45164
R417	R.CF	6.8K	.1	47.5m	14.72	14.72	31.9m	0.00097	1.0	1.000	5.0	4.86534
R500	R.MO(S)	1	.5	122.3m	108.0m	163.1m	26.6m	0.00073	1.0	1.000	5.0	3.64157
R503	R.CF	10K	.125	222.7m	14.13	14.13	20.0m	0.00082	1.0	1.000	5.0	4.09065
R504	R.CF	1.5M	.25	12.16	138.06	138.59	12.8m	0.00073	1.0	1.600	5.0	5.81374
R510	R.CF	1.5M	.25	20.3	137.5	138.99	12.9m	0.00073	1.0	1.600	5.0	5.81560
R531	R.MF	200	.1	40.3m	1.01	1.01	5.1m	0.00073	1.0	1.000	5.0	3.63305
R580	R.CF	750	.1	17.7m	781.4m	781.6m	814.5u	0.00069	1.0	1.000	5.0	3.46668
R581	R.CF	560	.1	9.9m	243.3m	243.5m	105.9u	0.00069	1.0	1.000	5.0	3.43997
R632	R.CF	47	.125	10.9m	77.1m	77.8m	128.9u	0.00069	1.0	1.000	5.0	3.43986
R633	R.CF	10K	.125	5.2m	2.49	2.49	620.0u	0.00069	1.0	1.000	5.0	3.45465
R634	R.CF	10K	.125	10.2m	2.51	2.51	630.0u	0.00069	1.0	1.000	5.0	3.45495
R636	R.CF	1K	.125	17.2m	981.7m	981.8m	964.0u	0.00069	1.0	1.000	5.0	3.46504
R640	R.MF	5.11K	.1	8.6m	4.85	4.85	4.6m	0.00072	1.0	1.000	5.0	3.61306
VR301	R.VR	100K	.1	68.5m	1.52	1.52	23.2u	0.00069	1.0	1.100	5.0	3.78055
VR401	R.VR	500	.1	0.6m	22.6m	22.6m	1.0u	0.00069	1.0	1.000	5.0	3.43603
TOTAL												**70.4881**

COMPONENT FAILURE RATE ANALYSIS

CAPACITOR

Model NO. : PS-5251-2DFS INPUT : 115VAC OUTPUT : MAX LOAD AT : 25 ℃ REV. D Page 4									
RATING				STRESS	$\lambda p = \lambda b * \pi E * \pi Q * \pi CV * 1000$				
Location	TYPE	CAP.	V(rate)	V	λb	πE	πQ	πCV	λP
C100	ELE	22uF	50	25.00	0.02393	1.0	3.000	0.593	42.58621
C101	MEX	0.22UF	400	162.50	0.00226	1.0	10.000	0.967	21.84200
C102	MEX	0.33UF	400	111.94	0.00127	1.0	10.000	1.001	12.68739
C103	DIS	1000PF	400	52.15	0.00069	1.0	3.000	0.877	1.80493
C104	DIS	1000PF	400	57.46	0.00077	1.0	3.000	0.877	2.01268
C105	DIS	470PF	400	314.06	0.01305	1.0	3.000	0.807	31.58883
C106	DIS	470PF	400	317.19	0.01343	1.0	3.000	0.807	32.49234
C108	DIS	2200PF	400	71.88	0.00084	1.0	3.000	0.956	2.40297
C120	ELE	680UF	200	157.81	0.05900	1.0	3.000	1.100	194.67500
C121	ELE	680UF	200	157.81	0.05900	1.0	3.000	1.100	194.67500
C122	DIS	0.01UF	500	312.50	0.00693	1.0	3.000	1.129	23.46198
C123	DIS	470PF	1000	112.16	0.00073	1.0	3.000	0.807	1.75625
C124	DIS	0.01UF	500	312.50	0.00693	1.0	3.000	1.129	23.46198
C125	MON	0.01UF	50	14.69	0.00134	1.0	3.000	1.129	4.53078
C200	MON	4700PF	50	30.31	0.00587	1.0	3.000	1.039	18.29366
C201	PEI	4700PF	100	41.88	0.00245	1.0	10.000	0.697	17.09537
C202	ELE	2200UF	10	6.31	0.03602	1.0	3.000	1.359	146.82280
C203	ELE	2200UF	10	5.31	0.02630	1.0	3.000	1.359	107.20650
C205	ELE	10UF	50	468.8m	0.01197	1.0	3.000	0.515	18.47591
C206	MON	0.22UF	50	25.94	0.00426	1.0	3.000	1.587	20.25851
C220	MON	1000PF	100	56.25	0.00482	1.0	3.000	0.877	12.66327
C222	ELE	10UF	50	406.3m	0.01197	1.0	3.000	0.515	18.47586
C223	ELE	2200UF	16	12.81	0.06110	1.0	3.000	1.359	249.05000
C224	ELE	220UF	25	13.91	0.02846	1.0	3.000	0.898	76.63940
C230	ELE	470UF	16	12.75	0.06041	1.0	3.000	1.029	186.51600
TOTAL									**1461.476**

COMPONENT FAILURE RATE ANALYSIS

CAPACITOR

Model NO. : PS-5251-2DFS INPUT : 115VAC OUTPUT : MAX LOAD AT : 25 ℃ REV. D Page 5									
RATING				STRESS	$\lambda p = \lambda b * \pi E * \pi Q * \pi CV * 1000$				
Location	TYPE	CAP.	V(rate)	V	λb	πE	πQ	πCV	λP
C233	ELE	47uF	50	12.13	0.01333	1.0	3.000	0.680	27.19904
C280	PEI	4700PF	100	25.31	0.00120	1.0	10.000	0.697	8.33838
C281	ELE	3300UF	6.3	3.50	0.02838	1.0	3.000	1.462	124.45230
C282	ELE	4700UF	6.3	3.50	0.02838	1.0	3.000	1.558	132.63190
C283	ELE	10UF	50	718.8m	0.01197	1.0	3.000	0.515	18.47622
C301	MON	0.1UF	50	1.72	0.00069	1.0	3.000	1.455	3.01431
C302	MON	0.1UF	50	6.72	0.00075	1.0	3.000	1.455	3.28040
C304	MON	1000PF	100	1.72	0.00069	1.0	3.000	0.877	1.81391
C305	MON	0.022UF	50	5.16	0.00072	1.0	3.000	1.232	2.65173
C306	MON	470PF	50	4.06	0.00065	1.0	3.000	0.807	1.56552
C307	ELE	4.7UF	50	6.00	0.01213	1.0	3.000	0.449	16.35095
C3101	MON	1000PF	50	3.13	0.00064	1.0	3.000	0.877	1.68318
C3102	ELE	10UF	50	17.81	0.01629	1.0	3.000	0.515	25.15576
C311	MON	0.1UF	25	2.97	0.00073	1.0	3.000	1.455	3.19668
C312	MON	0.1UF	25	9.69	0.00218	1.0	3.000	1.455	9.50092
C313	MON	0.1UF	50	78.1m	0.00069	1.0	3.000	1.455	3.00977
C330	MON	0.47UF	16	3.44	0.00094	1.0	3.000	1.725	4.88178
C331	MON	100PF	50	312.5m	0.00063	1.0	3.000	0.680	1.29481
C332	MON	0.1UF	25	109.4m	0.00069	1.0	3.000	1.455	3.00978
C340	MON	0.1UF	50	1.36	0.00069	1.0	3.000	1.455	3.01202
C400	ELE	6.8UF	50	8.28	0.01240	1.0	3.000	0.480	17.86293
C401	ELE	2.2UF	50	4.84	0.01205	1.0	3.000	0.392	14.17030
C402	MON	1000PF	50	5.00	0.00066	1.0	3.000	0.877	1.72980
C403	MON	0.1UF	25	250.0m	0.00063	1.0	3.000	1.455	2.76833
C404	MON	0.1UF	25	468.8m	0.00063	1.0	3.000	1.455	2.76890
TOTAL									433.8196

COMPONENT FAILURE RATE ANALYSIS

CAPACITOR

Model NO. : PS-5251-2DFS INPUT : 115VAC OUTPUT : MAX LOAD AT : 25 ℃ REV. D Page 6									
RATING				STRESS	$\lambda p = \lambda b * \pi E * \pi Q * \pi CV * 1000$				
Location	TYPE	CAP.	V(rate)	V	λb	πE	πQ	πCV	λP
C416	MON	0.1UF	25	5.19	0.00092	1.0	3.000	1.455	4.00713
C417	MON	0.1UF	25	4.50	0.00084	1.0	3.000	1.455	3.65988
C418	MON	0.1UF	25	4.38	0.00083	1.0	3.000	1.455	3.60925
C419	MON	0.1UF	25	5.69	0.00099	1.0	3.000	1.455	4.32405
C501	ELE	100UF	35	20.00	0.02983	1.0	3.000	0.779	69.70676
C502	MON	0.1UF	50	15.94	0.00152	1.0	3.000	1.455	6.62158
C503	ELE	1000UF	10	6.88	0.04315	1.0	3.000	1.179	152.59580
C504	ELE	470UF	10	5.94	0.03203	1.0	3.000	1.029	98.89548
C505	ELE	100UF	25	20.31	0.06330	1.0	3.000	0.779	147.91490
C509	MON	0.1UF	25	2.34	0.00065	1.0	3.000	1.455	2.85230
C510	ELE	1000UF	10	7.19	0.04755	1.0	3.000	1.179	168.18320
C510S	MON	0.47UF	16	781.3m	0.00069	1.0	3.000	1.725	3.58371
C511	MON	1UF	25	3.13	0.00068	1.0	3.000	1.874	3.82537
C511S	DIS	0.01UF	1000	19.69	0.00063	1.0	3.000	1.129	2.14943
C512	MON	1UF	25	15.47	0.00620	1.0	3.000	1.874	34.86214
C531	ELE	22UF	50	4.75	0.01205	1.0	3.000	0.593	21.43916
C580	ELE	47UF	25	5.38	0.01292	1.0	3.000	0.680	26.35696
C600	ELE	2.2UF	50	4.34	0.01203	1.0	3.000	0.392	14.14182
C631	MON	0.1UF	50	3.44	0.00064	1.0	3.000	1.455	2.80161
TOTAL									**771.5306**

COMPONENT FAILURE RATE ANALYSIS

DIODE

Model NO. : PS-5251-2DFS INPUT : 115VAC OUTPUT : MAX LOAD AT : 25 ℃ REV. D Page 7

RATING						STRESS			$\lambda p = \lambda b * \pi E * \pi Q * \pi T * \pi S * \pi C * 1000$						
Location	P/N	TYPE	V(rate)	If(A)	Tj(℃)	Vr(V)	If(A)	Tj(℃)	λb	πE	πQ	πT	πS	πC	λP
D100	GBU808	BRIDGE	800	8	150	303.13	1.34	33.9	0.00500	1.0	5.5	1.353	0.095	1.0	3.51967
D102	1N4007	GENERAL	1000	1	175	1.69	391.9u	71.3	0.00380	1.0	5.5	4.038	0.054	1.0	4.55705
D103	1N4007	GENERAL	1000	1	175	4.13	443.6u	31.4	0.00380	1.0	5.5	1.245	0.054	1.0	1.40536
D120	BYV-26E	GENERAL	1000	1	175	612.50	-125.9m	43.9	0.00380	1.0	5.5	1.858	0.304	1.0	11.79966
D200	MBR3045CT	SCHOTTKY	45	30	150	27.13	10.64	42.1	0.00300	1.0	5.5	1.757	0.292	1.0	8.47742
D201	MBR3045PT	SCHOTTKY	45	30	150	27.50	10.67	41.6	0.00300	1.0	5.5	1.726	0.302	1.0	8.60683
D202	BAV20	GENERAL	200	.25	175	28.44	8.5m	59.2	0.00380	1.0	5.5	2.908	0.054	1.0	3.28146
D220	MBR20100CT	SCHOTTKY	100	20	150	67.19	6.42	61.7	0.00300	1.0	5.5	3.118	0.380	1.0	19.57734
D231	UG2D	FR	200	2	150	156.88	1.00	92.0	0.06900	1.0	5.5	6.720	0.554	1.0	1413.62300
D250	1N4937	FR	600	1	150	23.75	-3.3m	44.5	0.06900	1.0	5.5	1.889	0.054	1.0	38.70714
D251	ERB91-02	FR	200	1	150	45.63	8.1m	43.3	0.06900	1.0	5.5	1.822	0.054	1.0	37.33574
D280	MBR3045PT	SCHOTTKY	45	30	150	30.63	5.98	37.5	0.00300	1.0	5.5	1.520	0.393	1.0	9.84581
D284	1N4002	GENERAL	100	1	175	2.06	-1.2m	48.1	0.00380	1.0	5.5	2.111	0.054	1.0	2.38246
D301	1N4148	GENERAL	75	.2	200	1.31	-304.8u	28.5	0.00380	1.0	5.5	1.127	0.054	1.0	1.27185
D302	RLS4148	GENERAL	75	.2	200	5.31	-329.8u	30.7	0.00380	1.0	5.5	1.215	0.054	1.0	1.37117
D303	1N4148	GENERAL	75	.2	200	531.3m	-143.6u	29.4	0.00380	1.0	5.5	1.164	0.054	1.0	1.31399
D304	RLS4148	GENERAL	75	.2	200	5.88	-59.8u	30.5	0.00380	1.0	5.5	1.207	0.054	1.0	1.36199
D305	RLS4148	GENERAL	75	.2	200	1.44	3.1m	39.0	0.00380	1.0	5.5	1.593	0.054	1.0	1.79770
D502	1N4937	FR	600	1	150	375.00	36.7m	43.6	0.06900	1.0	5.5	1.840	0.319	1.0	222.80440
D503	ERB91-02	FR	200	1	150	67.19	4.4m	39.6	0.06900	1.0	5.5	1.621	0.071	1.0	43.42773
D504	BAV20	GENERAL	200	.25	175	96.88	-36.7m	45.9	0.00380	1.0	5.5	1.976	0.172	1.0	7.09422
D505	SB360	SCHOTTKY	60	3	150	34.69	1.36	62.1	0.00300	1.0	5.5	3.150	0.264	1.0	13.72692
D531	1N4002	GENERAL	100	1	175	10.94	4.8m	37.7	0.00380	1.0	5.5	1.529	0.054	1.0	1.72596
ZD120	1N4744A	ZENER	15.75	.061	200	14.06	12.4m	67.5	0.00200	1.0	5.5	2.238	1.000	1.0	24.61726
ZD123	1N4734A	ZENER	5.6	1	200	1.91	54.0m	44.0	0.00200	1.0	5.5	1.474	1.000	1.0	16.21271
TOTAL															**1899.845**

COMPONENT FAILURE RATE ANALYSIS

DIODE

Model NO. : PS-5251-2DFS INPUT : 115VAC OUTPUT : MAX LOAD AT : 25 ℃ REV. D Page 8															
RATING						STRESS			$\lambda p = \lambda b * \pi E * \pi Q * \pi T * \pi S * \pi C * 1000$						
Location	P/N	TYPE	V(rate)	If(A)	Tj(℃)	Vr(V)	If(A)	Tj(℃)	λb	πE	πQ	πT	πS	πC	λP
ZD400	RD12EB3	ZENER	12.3	.2	175	8.44	328.0u	38.6	0.00200	1.0	5.5	1.327	1.000	1.0	14.59281
ZD502	ERD5.1EB2	ZENER	5.18	.096	175	5.16	2.4m	41.3	0.00200	1.0	5.5	1.398	1.000	1.0	15.37799
ZD503	RD15EB3	ZENER	15.02	.033	175	10.16	2.2m	55.6	0.00200	1.0	5.5	1.825	1.000	1.0	20.07397
ZD531	RD11EB3	ZENER	11.26	.044	175	1.19	165.5m	74.6	0.00200	1.0	5.5	2.515	1.000	1.0	27.66643
TOTAL															**77.71121**

COMPONENT FAILURE RATE ANALYSIS

TRANSFORMER

Model NO. : PS-5251-2DFS INPUT : 115VAC OUTPUT : MAX LOAD AT : 25 ℃ REV. D Page 9							
RATING			STRESS	$\lambda p = \lambda b * \pi E * \pi Q * 1000$			
Location	MAKER	TYPE	Ths(℃)	λb	πE	πQ	λP
T120	LITON	ERL-35 PC40	60.3	0.00319	1.0	30.0	95.60547
T501	LITON	EE-19 PC40	45.9	0.00257	1.0	30.0	77.11378
TOTAL							**172.7193**

COMPONENT FAILURE RATE ANALYSIS

TRANSISTOR

Model NO. : PS-5251-2DFS INPUT : 115VAC OUTPUT : MAX LOAD AT : 25 ℃ REV. D Page 10															
RATING					STRESS			$\lambda p = \lambda b * \pi R * \pi Q * \pi A * \pi S * \pi T * \pi E * 1000$							
Location	P/N	Vce(rate)(V)	Ie(A)	Tj(℃)	Vce(V)	Ie(A)	Tj(℃)	λb	πR	πQ	πA	πS	πT	πE	λP
Q121	MPSA42	300	.5	150	156.25	14.6m	440.1	0.00074	0.840	8.0	0.700	0.226	62.145	1.0	48.94602
Q122	MPSA92	300	.5	150	146.88	1.8m	68.2	0.00074	0.840	8.0	0.700	0.205	2.456	1.0	1.75608
Q251	KSA916Y	120	.8	150	31.88	9.1m	42.7	0.00074	0.962	8.0	0.700	0.103	1.488	1.0	0.60812
Q301	2SC1815	50	.15	125	5.31	1.3m	31.7	0.00074	0.712	8.0	1.500	0.063	1.168	1.0	0.46224
Q302	KSR2202	50	.1	150	6.09	623.5u	28.3	0.00074	0.641	8.0	0.700	0.066	1.081	1.0	0.18833
Q303	2SA1015	50	.15	150	4.31	57.4m	36.4	0.00074	0.712	8.0	0.700	0.059	1.298	1.0	0.22523
Q311	KST2907A	60	.6	150	390.6m	4.1m	48.5	0.00074	0.678	8.0	1.500	0.046	1.679	1.0	0.46411
Q314	KST2222A	40	.6	150	281.3m	1.3m	38.1	0.00074	0.678	8.0	0.700	0.046	1.347	1.0	0.17408
Q531	KSA916Y	120	.8	150	10.63	2.0m	37.4	0.00074	0.962	8.0	0.700	0.059	1.328	1.0	0.31343
Q580	KST2907A	60	.6	150	2.44	3.8m	31.8	0.00074	0.678	8.0	0.700	0.051	1.170	1.0	0.16788
TOTAL															**53.3055**

COMPONENT FAILURE RATE ANALYSIS

IC

Model NO. : PS-5251-2DFS INPUT : 115VAC OUTPUT : MAX LOAD AT : 25 ℃ REV. D Page 11															
RATING						STRESS			$\lambda p = (C1 * \pi T + C2 * \pi E) * \pi Q * \pi L * 1000$						
Location	MAKER	TYPE	Vcc(V)	I(A)	Tj(℃)	Vcc(V)	I(A)	Tj(℃)	πQ	C1	πT	C2	πE	πL	λP
IC230	STM	7912ACV	35	1.5	125	2.83	944.7m	68.1	10.0	.01	2.454	0.001	.5	1.000	251.26360
IC511	SAMSU	KA431AZ	37	.15	150	11.25	913.7u	39.3	10.0	.01	0.319	0.001	.5	1.000	37.82027
IC600	SAMSU	KA431AZ	37	.15	150	5.06	26.0m	25.3	10.0	.01	0.103	0.001	.5	1.000	16.19009
IC300	MOTOR	UC3845BN	30	1	150	17.03	55.0m	67.8	10.0	.01	2.398	0.003	.5	1.000	256.77730
IC400	STM	TSM111CN	36	.03	150	19.69	6.1m	51.0	10.0	.01	0.763	0.001	.5	1.000	80.09075
TOTAL															**642.1419**

COMPONENT FAILURE RATE ANALYSIS

MOSFET

Model NO. : PS-5251-2DFS INPUT : 115VAC OUTPUT : MAX LOAD AT : 25 ℃ REV. D Page 12															
RATING							STRESS			$\lambda p = \lambda b * \pi E * \pi Q * \pi T * \pi A * 1000$					
Location	MAKER	TYPE	Vds(V)	Id(A)	Pr(W)	Tj(℃)	Vds(V)	Id(A)	Tj(℃)	λb	πE	πQ	πT	πA	λP
IC501	POWER	TNY267P	700	.4	0	150	506.25	118.1m	39.3	.012	1.0	5.5	1.344	0.700	62.08404
Q120	TOSHB	2SK2611	900	9	150	150	637.50	2.18	47.6	.012	1.0	5.5	1.578	8.000	833.17500
TOTAL															**895.259**

COMPONENT FAILURE RATE ANALYSIS

CHOKE

Model NO. : PS-5251-2DFS INPUT : 115VAC OUTPUT : MAX LOAD AT : 25 ℃ REV. D Page 13								
RATING			STRESS	$\lambda p = \lambda b * \pi E * \pi Q * \pi C * 1000$				
Location	MAKER	TYPE	Ths(℃)	λb	πE	πQ	πC	λP
L100	LITON	EEL-25	28.3	0.00042	1.0	20.0	1.0	8.48971
L101	LITON	TR18*10*10	30.5	0.00043	1.0	20.0	1.0	8.59351
L102	LITON	EE43*35	25.3	0.00042	1.0	20.0	1.0	8.36601
L200	LITON	T106-52	52.7	0.00053	1.0	20.0	1.0	10.62250
L201	LITON	R4*10	55.8	0.00056	1.0	20.0	1.0	11.13955
L210	LITEON	R5*25	29.2	0.00043	1.0	20.0	1.0	8.52991
L280	LITON	MAG AMP W760	59.2	0.00059	1.0	20.0	1.0	11.82634
L281	LITON	T68-52D	29.8	0.00043	1.0	20.0	1.0	8.56120
L282	LITON	R4*10	51.0	0.00052	1.0	20.0	1.0	10.36385
L501	LITON	DR6*8.3	49.6	0.00051	1.0	20.0	1.0	10.18530
TOTAL								**96.67789**

COMPONENT FAILURE RATE ANALYSIS

PHOTO-COUPLE

Model NO. : PS-5251-2DFS INPUT : 115VAC OUTPUT : MAX LOAD AT : 25 ℃ REV. D Page 14														
RATING							STRESS			$\lambda p = \lambda b * \pi E * \pi Q * \pi T * 1000$				
Location	MAKER	P/N	TYPE	Vr(V)	If(A)	Tj(℃)	Vr(V)	If(A)	Tj(℃)	λb	πE	πQ	πT	λP
PC301	LITON	LTV817B	TRANSISTOR	35	.05	125	3.63	5.7m	59.5	0.00550	1.0	8.0	2.644	116.34970
PC3012	LITON	LTV817B	DIODE	6	.05	125	1.36	5.8m	56.7	0.00400	1.0	8.0	2.461	78.76166
PC401	LITON	LTV817B	TRANSISTOR	35	.05	125	1.81	19.6m	48.9	0.00550	1.0	8.0	2.001	88.05828
PC4012	LITON	LTV817B	DIODE	6	.05	125	1.59	26.2m	53.0	0.00400	1.0	8.0	2.236	71.54115
PC501	LITON	LTV817B	TRANSISTOR	35	.05	125	1.88	870.5u	55.7	0.00550	1.0	8.0	2.396	105.40390
PC5012	LITON	LTV817B	DIODE	6	.05	125	1.44	9.4m	60.6	0.00400	1.0	8.0	2.716	86.92180
PC502	LITON	LTV817B	TRANSISTOR	35	.05	125	10.63	6.4m	61.8	0.00550	1.0	8.0	2.800	123.21580
PC5022	LITON	LTV817B	DIODE	6	.05	125	1.42	4.8m	59.9	0.00400	1.0	8.0	2.666	85.31056
TOTAL														**755.5629**

COMPONENT FAILURE RATE ANALYSIS

THERMISTOR

Model NO. : PS-5251-2DFS INPUT : 115VAC OUTPUT : MAX LOAD AT : 25 ℃ REV. D Page 15						
RATING			$\lambda p = \lambda b * \pi E * \pi Q * 1000$			
Location	MAKER	TYPE	λb	πE	πQ	λP
RT531	THINK	SCK-103	.065	1.0	1.0	65.00000
TOTAL						**65.000**

RELIABILITY ENGINEERING REPORT

TO : DOC

DOC NO : 030381 b

DATE : 2/26/2003

FROM : QRA RELIABILITY

SUBJECT : PS-5251-2DFS MTBF TEST REPORT.

DESCRIPTION :

1. 此份爲 PS-5251-2DFS MTBF TEST REPORT.

MIL-217F PREDITABLE MTBF : 115VAC : 148,888 Hours, Ambient : 25 °C
230VAC : 140,287 Hours, Ambient : 25 °C

Customer SPEC. : 125,000 Hours, Ambient : 25 °C

JUDGE : OK

2. 此份根據 PART LIST REV. G 完成 .

3. 請技資保留原稿存檔 .

敬會 設計工程師 : 劉如毅 2/25/'03

設計部經理 : 陳孝忠

PREPARED BY : 張家祥 Feb.14'03 CHECKED BY : α APPROVED BY : 林廣揚 Feb.14'03

PS-5251-2DFS MTBF REPORT LIST REV. G 02-14-2003

COMPONENT	FAILURE RATE	Q'TY	PAGE NO.
Resistor	263.46	68	1, 2, 3
Capacitor	2666.83	69	4, 5, 6
Diode	1363.43	29	7, 8
Transformer	172.72	2	9
Transistor	5.00	10	10
IC	432.51	5	11
MOSFET	895.26	2	12
Choke	96.68	10	13
Photo-Couple	755.56	8	14
Thermistor	65.00	1	15
TOTAL	**6716.45**	**204**	
MTBF	**148888 HOURS**		

REFER DOCUMENT : MIL - HDBK 217F

CUSTOMER MTBF SPEC. : 125,000 Hours

ACTUAL MTBF : 148,888 Hours

JUDGE : OK

PREPARED : 張家祥 Feb. 14'03 CHECK : α APPROVED : 林廣揚 Feb. 14'03

COMPONENT FAILURE RATE ANALYSIS

RESISTOR

Model NO. : PS-5251-2DFS INPUT : 115VAC OUTPUT : MAX LOAD AT : 25 ℃ REV. G Page 1

RATING				STRESS				$\lambda p = \lambda b * \pi E * \pi R * \pi Q * 1000$				
Location	TYPE	OHM	W(rate)	Vac(V)	Vdc(V)	Vrms(V)	Watt	λb	πE	πR	πQ	λP
R100	R.MO(S)	910K	.5	113.82	2.1m	113.82	14.2m	0.00071	1.0	1.100	5.0	3.89891
R120	R.CF	680K	.25	7.76	148.5	148.70	32.5m	0.00079	1.0	1.100	5.0	4.35621
R121	R.CF	680K	.25	7.81	148.39	148.60	32.5m	0.00079	1.0	1.100	5.0	4.35532
R122	R.CF(S)	1K	.25	4.75	2.63	5.43	29.5m	0.00078	1.0	1.000	5.0	3.90799
R123	R.MO	0.1	2	241.5m	113.2m	266.7m	711.4m	0.00101	1.0	1.000	5.0	5.06605
R124	R.MO(S)	1	.5	249.6m	124.4m	278.9m	77.8m	0.00081	1.0	1.000	5.0	4.07198
R125	R.MO(S)	1M	.5	7.13	282.97	283.06	80.1m	0.00082	1.0	1.100	5.0	4.50207
R126	R.MF	39K	.125	173.3m	11.81	11.81	3.6m	0.00071	1.0	1.000	5.0	3.54502
R129	R.MO(S)	1M	.5	9.05	135.96	136.26	18.6m	0.00072	1.0	1.100	5.0	3.93595
R200	R.MO(S)	10	.5	585.5m	0.0m	585.5m	34.3m	0.00074	1.0	1.000	5.0	3.70305
R201	R.MO(S)	10	.5	1.06	0.6m	1.06	112.4m	0.00088	1.0	1.000	5.0	4.39122
R202	R.CF	100	.125	24.4m	11.9m	27.1m	7.3u	0.00069	1.0	1.000	5.0	3.43622
R220	R.MO	47	1	2.4m	0.0m	2.4m	0.1u	0.00069	1.0	1.000	5.0	3.43600
R221	R.CF	100	.125	292.3m	12.3m	292.5m	855.8u	0.00069	1.0	1.000	5.0	3.46177
R223	R.MO(S)	330	1	1.1	12.14	12.19	450.3m	0.00112	1.0	1.000	5.0	5.61709
R224	R.ZW	0.0050	30	178.3m	78.3m	194.8m	7.59	0.00091	1.0	1.000	5.0	4.52863
R250	R.CF	220	.1	38.2m	691.4m	692.5m	2.2m	0.00070	1.0	1.000	5.0	3.51873
R251	R.MO(S)	100	.5	26.7m	96.3m	99.9m	99.8u	0.00069	1.0	1.000	5.0	3.43674
R252	R.CF	1K	.125	12.4m	143.3m	143.8m	20.7u	0.00069	1.0	1.000	5.0	3.43662
R280	R.MO(S)	10	.5	1.08	-0.4m	1.08	116.6m	0.00089	1.0	1.000	5.0	4.43244
R281	R.CF	100	.125	27.6m	5.5m	28.1m	7.9u	0.00069	1.0	1.000	5.0	3.43623
R282	R.MO(S)	30	1	3.7m	3.48	3.48	403.7m	0.00107	1.0	1.000	5.0	5.33856
R301	R.CF	1M	.125	212.8m	16.5m	213.4m	0.0u	0.00069	1.0	1.100	5.0	3.77960
R302	R.MF	12.4K	.125	442.7m	2.66	2.70	586.4u	0.00069	1.0	1.000	5.0	3.45364
R303	R.CF	10K	.1	59.8m	959.1m	961.0m	92.3u	0.00069	1.0	1.000	5.0	3.43946
TOTAL												**100.4855**

COMPONENT FAILURE RATE ANALYSIS

RESISTOR

Model NO. : PS-5251-2DFS INPUT : 115VAC OUTPUT : MAX LOAD AT : 25 ℃ REV. G Page 2

RATING				STRESS				$\lambda p = \lambda b * \pi E * \pi R * \pi Q * 1000$				
Location	TYPE	OHM	W(rate)	Vac(V)	Vdc(V)	Vrms(V)	Watt	λb	πE	πR	πQ	λP
R304	R.CF	10K	.125	364.5m	2.0	2.03	413.3u	0.00069	1.0	1.000	5.0	3.44842
R305	R.CF	330	.1	208.1m	2.01	2.02	12.4m	0.00079	1.0	1.000	5.0	3.93291
R306	R.CF	39K	.125	5.21	2.82	5.92	899.9u	0.00069	1.0	1.000	5.0	3.46310
R307	R.CF	3K	.125	295.9m	12.82	12.82	54.8m	0.00111	1.0	1.000	5.0	5.54541
R308	R.CF	20	.1	608.8m	83.3m	614.5m	18.9m	0.00084	1.0	1.000	5.0	4.22247
R309	R.CF	1K	.125	731.6m	107.1m	739.4m	546.7u	0.00069	1.0	1.000	5.0	3.45244
R3101	R.CF	1.3K	.1	51.8m	788.3m	790.0m	480.1u	0.00069	1.0	1.000	5.0	3.45405
R311	R.CF	1K	.1	459.7m	0.1m	459.7m	211.4u	0.00069	1.0	1.000	5.0	3.44393
R3121	R.CF	10000	.1	80.4m	2.26	2.26	511.4u	0.00069	1.0	1.000	5.0	3.45523
R3122	R.CF	39K	.1	43.1m	1.61	1.61	66.5u	0.00069	1.0	1.000	5.0	3.43849
R313	R.CF	110	.1	393.0m	258.8m	470.6m	2.0m	0.00070	1.0	1.000	5.0	3.51233
R314	R.CF	1K	.1	372.2m	3.68	3.70	13.7m	0.00080	1.0	1.000	5.0	3.98942
R315	R.CF	10	.1	19.3m	34.4m	39.4m	155.2u	0.00069	1.0	1.000	5.0	3.44182
R330	R.CF	100	.1	47.6m	332.2m	335.6m	1.1m	0.00070	1.0	1.000	5.0	3.47851
R331	R.CF	10	.1	15.6m	89.1m	90.5m	818.7u	0.00069	1.0	1.000	5.0	3.46684
R332	R.MF	866	.1	41.5m	916.1m	917.1m	971.2u	0.00069	1.0	1.000	5.0	3.47261
R333	R.CF	20K	.1	124.3m	0.0m	124.3m	0.8u	0.00069	1.0	1.000	5.0	3.43602
R334	R.MF	2.49K	.1	42.1m	2.49	2.49	2.5m	0.00071	1.0	1.000	5.0	3.53070
R340	R.MF	10K	.1	22.2m	0.0m	22.2m	0.0u	0.00069	1.0	1.000	5.0	3.43600
R400	R.CF	200	.1	29.5m	826.0m	826.5m	3.4m	0.00071	1.0	1.000	5.0	3.56653
R401	R.MO	33K	.1	458.7m	22.6	22.60	15.5m	0.00081	1.0	1.000	5.0	4.06871
R402	R.CF	6.2K	.25	561.0m	22.52	22.53	81.8m	0.00098	1.0	1.000	5.0	4.91202
R410	R.MF	523	.125	109.3m	72.2m	131.0m	32.8u	0.00069	1.0	1.000	5.0	3.43698
R411	R.MF	75K	.1	280.3m	4.92	4.93	323.8u	0.00069	1.0	1.000	5.0	3.44816
R412	R.CF	620	.1	47.0m	15.1m	49.4m	3.9u	0.00069	1.0	1.000	5.0	3.43614
TOTAL												**92.48924**

COMPONENT FAILURE RATE ANALYSIS

RESISTOR

Model NO. : PS-5251-2DFS	INPUT : 115VAC	OUTPUT : MAX LOAD AT : 25 ℃										REV. G Page 3
RATING				STRESS				$\lambda p = \lambda b * \pi E * \pi R * \pi Q * 1000$				
Location	TYPE	OHM	W(rate)	Vac(V)	Vdc(V)	Vrms(V)	Watt	λb	πE	πR	πQ	λP
R413	R.CF	100K	.1	59.4m	3.52	3.52	123.9u	0.00069	1.0	1.100	5.0	3.78471
R415	R.CF	100K	.1	47.1m	12.15	12.15	1.5m	0.00070	1.0	1.100	5.0	3.84100
R416	R.CF	1K	.1	104.5m	636.7m	645.2m	416.3u	0.00069	1.0	1.000	5.0	3.45164
R417	R.CF	6.8K	.1	47.5m	14.72	14.72	31.9m	0.00097	1.0	1.000	5.0	4.86534
R500	R.MO(S)	1	.5	122.3m	108.0m	163.1m	26.6m	0.00073	1.0	1.000	5.0	3.64157
R503	R.CF	10K	.125	222.7m	14.13	14.13	20.0m	0.00082	1.0	1.000	5.0	4.09065
R504	R.CF	1.5M	.25	12.16	138.06	138.59	12.8m	0.00073	1.0	1.600	5.0	5.81374
R510	R.CF	1.5M	.25	20.3	137.5	138.99	12.9m	0.00073	1.0	1.600	5.0	5.81560
R531	R.MF	200	.1	40.3m	1.01	1.01	5.1m	0.00073	1.0	1.000	5.0	3.63305
R580	R.CF	750	.1	17.7m	781.4m	781.6m	814.5u	0.00069	1.0	1.000	5.0	3.46668
R581	R.CF	560	.1	9.9m	243.3m	243.5m	105.9u	0.00069	1.0	1.000	5.0	3.43997
R632	R.CF	47	.125	10.9m	77.1m	77.8m	128.9u	0.00069	1.0	1.000	5.0	3.43986
R633	R.CF	10K	.125	5.2m	2.49	2.49	620.0u	0.00069	1.0	1.000	5.0	3.45465
R634	R.CF	10K	.125	10.2m	2.51	2.51	630.0u	0.00069	1.0	1.000	5.0	3.45495
R636	R.CF	1K	.125	17.2m	981.7m	981.8m	964.0u	0.00069	1.0	1.000	5.0	3.46504
R640	R.MF	5.11K	.1	8.6m	4.85	4.85	4.6m	0.00072	1.0	1.000	5.0	3.61306
VR301	R.VR	100K	.1	68.5m	1.52	1.52	23.2u	0.00069	1.0	1.100	5.0	3.78055
VR401	R.VR	500	.1	0.6m	22.6m	22.6m	1.0u	0.00069	1.0	1.000	5.0	3.43603
TOTAL												**70.4881**

COMPONENT FAILURE RATE ANALYSIS

CAPACITOR

Model NO. : PS-5251-2DFS INPUT : 115VAC OUTPUT : MAX LOAD AT : 25 ℃ REV. G Page 4

RATING				STRESS	$\lambda p = \lambda b * \pi E * \pi Q * \pi CV * 1000$				
Location	TYPE	CAP.	V(rate)	V	λb	πE	πQ	πCV	λP
C100	ELE	22uF	50	25.00	0.02393	1.0	3.000	0.593	42.58621
C101	MEX	0.22UF	400	162.50	0.00226	1.0	10.000	0.967	21.84200
C102	MEX	0.33UF	400	111.94	0.00127	1.0	10.000	1.001	12.68739
C103	DIS	1000PF	400	52.15	0.00069	1.0	3.000	0.877	1.80493
C104	DIS	1000PF	400	57.46	0.00077	1.0	3.000	0.877	2.01268
C105	DIS	470PF	400	314.06	0.01305	1.0	3.000	0.807	31.58883
C106	DIS	470PF	400	317.19	0.01343	1.0	3.000	0.807	32.49234
C108	DIS	2200PF	400	71.88	0.00084	1.0	3.000	0.956	2.40297
C120	ELE	680UF	200	157.81	0.05900	1.0	3.000	1.100	194.67500
C121	ELE	680UF	200	157.81	0.05900	1.0	3.000	1.100	194.67500
C122	DIS	0.01UF	500	312.50	0.00693	1.0	3.000	1.129	23.46198
C123	DIS	470PF	1000	112.16	0.00073	1.0	3.000	0.807	1.75625
C124	DIS	0.01UF	500	312.50	0.00693	1.0	3.000	1.129	23.46198
C125	MON	0.01UF	50	14.69	0.00134	1.0	3.000	1.129	4.53078
C200	MON	4700PF	50	30.31	0.00587	1.0	3.000	1.039	18.29366
C201	PEI	4700PF	100	41.88	0.00245	1.0	10.000	0.697	17.09537
C202	ELE	2200UF	10	6.31	0.03602	1.0	3.000	1.359	146.82280
C203	ELE	2200UF	10	5.31	0.02630	1.0	3.000	1.359	107.20650
C205	ELE	10UF	50	468.8m	0.01197	1.0	3.000	0.515	18.47591
C206	MON	0.22UF	50	25.94	0.00426	1.0	3.000	1.587	20.25851
C220	MON	1000PF	100	56.25	0.00482	1.0	3.000	0.877	12.66327
C222	ELE	10UF	50	406.3m	0.01197	1.0	3.000	0.515	18.47586
C223	ELE	2200UF	16	12.81	0.06110	1.0	3.000	1.359	249.05000
C224	ELE	220UF	25	13.91	0.02846	1.0	3.000	0.898	76.63940
C230	ELE	470UF	16	12.75	0.06041	1.0	3.000	1.029	186.51600
TOTAL									**1461.476**

COMPONENT FAILURE RATE ANALYSIS

CAPACITOR

Model NO. : PS-5251-2DFS INPUT : 115VAC OUTPUT : MAX LOAD AT : 25 ℃ REV. G Page 5

RATING				STRESS	$\lambda p = \lambda b * \pi E * \pi Q * \pi CV * 1000$				
Location	TYPE	CAP.	V(rate)	V	λb	πE	πQ	πCV	λP
C233	ELE	47uF	50	12.13	0.01333	1.0	3.000	0.680	27.19904
C280	PEI	4700PF	100	25.31	0.00120	1.0	10.000	0.697	8.33838
C281	ELE	3300UF	6.3	3.50	0.02838	1.0	3.000	1.462	124.45230
C282	ELE	4700UF	6.3	3.50	0.02838	1.0	3.000	1.558	132.63190
C283	ELE	10UF	50	718.8m	0.01197	1.0	3.000	0.515	18.47622
C301	MON	0.1UF	50	1.72	0.00069	1.0	3.000	1.455	3.01431
C302	MON	0.1UF	50	6.72	0.00075	1.0	3.000	1.455	3.28040
C304	MON	1000PF	100	1.72	0.00069	1.0	3.000	0.877	1.81391
C305	MON	0.022UF	50	5.16	0.00072	1.0	3.000	1.232	2.65173
C306	MON	470PF	50	4.06	0.00065	1.0	3.000	0.807	1.56552
C307	ELE	4.7UF	50	6.00	0.01213	1.0	3.000	0.449	16.35095
C3101	MON	1000PF	50	3.13	0.00064	1.0	3.000	0.877	1.68318
C3102	ELE	10UF	50	17.81	0.01629	1.0	3.000	0.515	25.15576
C311	MON	0.1UF	25	2.97	0.00073	1.0	3.000	1.455	3.19668
C312	MON	0.1UF	25	9.69	0.00218	1.0	3.000	1.455	9.50092
C313	MON	0.1UF	50	78.1m	0.00069	1.0	3.000	1.455	3.00977
C330	MON	0.47UF	16	3.44	0.00094	1.0	3.000	1.725	4.88178
C331	MON	100PF	50	312.5m	0.00063	1.0	3.000	0.680	1.29481
C332	MON	0.1UF	25	109.4m	0.00069	1.0	3.000	1.455	3.00978
C340	MON	0.1UF	50	1.36	0.00069	1.0	3.000	1.455	3.01202
C400	ELE	6.8UF	50	8.28	0.01240	1.0	3.000	0.480	17.86293
C401	ELE	2.2UF	50	4.84	0.01205	1.0	3.000	0.392	14.17030
C402	MON	1000PF	50	5.00	0.00066	1.0	3.000	0.877	1.72980
C403	MON	0.1UF	25	250.0m	0.00063	1.0	3.000	1.455	2.76833
C404	MON	0.1UF	25	468.8m	0.00063	1.0	3.000	1.455	2.76890
TOTAL									**433.8196**

COMPONENT FAILURE RATE ANALYSIS

CAPACITOR

Model NO. : PS-5251-2DFS INPUT : 115VAC OUTPUT : MAX LOAD AT : 25 ℃ REV. G Page 6

RATING				STRESS	$\lambda p = \lambda b * \pi E * \pi Q * \pi CV * 1000$				
Location	TYPE	CAP.	V(rate)	V	λb	πE	πQ	πCV	λP
C416	MON	0.1UF	25	5.19	0.00092	1.0	3.000	1.455	4.00713
C417	MON	0.1UF	25	4.50	0.00084	1.0	3.000	1.455	3.65988
C418	MON	0.1UF	25	4.38	0.00083	1.0	3.000	1.455	3.60925
C419	MON	0.1UF	25	5.69	0.00099	1.0	3.000	1.455	4.32405
C501	ELE	100UF	35	20.00	0.02983	1.0	3.000	0.779	69.70676
C502	MON	0.1UF	50	15.94	0.00152	1.0	3.000	1.455	6.62158
C503	ELE	1000UF	10	6.88	0.04315	1.0	3.000	1.179	152.59580
C504	ELE	470UF	10	5.94	0.03203	1.0	3.000	1.029	98.89548
C505	ELE	100UF	25	20.31	0.06330	1.0	3.000	0.779	147.91490
C509	MON	0.1UF	25	2.34	0.00065	1.0	3.000	1.455	2.85230
C510	ELE	1000UF	10	7.19	0.04755	1.0	3.000	1.179	168.18320
C510S	MON	0.47UF	16	781.3m	0.00069	1.0	3.000	1.725	3.58371
C511	MON	1UF	25	3.13	0.00068	1.0	3.000	1.874	3.82537
C511S	DIS	0.01UF	1000	19.69	0.00063	1.0	3.000	1.129	2.14943
C512	MON	1UF	25	15.47	0.00620	1.0	3.000	1.874	34.86214
C531	ELE	22UF	50	4.75	0.01205	1.0	3.000	0.593	21.43916
C580	ELE	47UF	25	5.38	0.01292	1.0	3.000	0.680	26.35696
C600	ELE	2.2UF	50	4.34	0.01203	1.0	3.000	0.392	14.14182
C631	MON	0.1UF	50	3.44	0.00064	1.0	3.000	1.455	2.80161
TOTAL									**771.5306**

COMPONENT FAILURE RATE ANALYSIS

DIODE

Model NO. : PS-5251-2DFS INPUT : 115VAC OUTPUT : MAX LOAD AT : 25 ℃ REV. G Page 7

RATING						STRESS			$\lambda p = \lambda b * \pi E * \pi Q * \pi T * \pi S * \pi C * 1000$						
Location	P/N	TYPE	V(rate)	If(A)	Tj(℃)	Vr(V)	If(A)	Tj(℃)	λb	πE	πQ	πT	πS	πC	λP
D100	GBU808	BRIDGE	800	8	150	303.13	1.34	33.9	0.00500	1.0	5.5	1.353	0.095	1.0	5.11951
D102	1N4007	GENERAL	1000	1	175	1.69	391.9u	71.3	0.00380	1.0	5.5	4.038	0.054	1.0	6.62844
D103	1N4007	GENERAL	1000	1	175	4.13	443.6u	31.4	0.00380	1.0	5.5	1.245	0.054	1.0	2.04416
D120	BYV-26E	GENERAL	1000	1	175	612.50	-125.9m	43.9	0.00380	1.0	5.5	1.858	0.304	1.0	17.16314
D200	MBR3045CT	SCHOTTKY	45	30	150	27.13	10.64	42.1	0.00300	1.0	5.5	1.757	0.292	1.0	12.33080
D201	MBR3045PT	SCHOTTKY	45	30	150	27.50	10.67	41.6	0.00300	1.0	5.5	1.726	0.302	1.0	12.51903
D202	BAV20	GENERAL	200	.25	175	28.44	8.5m	59.2	0.00380	1.0	5.5	2.908	0.054	1.0	4.77304
D220	MBR20100CT	SCHOTTKY	100	20	150	67.19	6.42	60.4	0.00300	1.0	5.5	3.009	0.380	1.0	27.48116
D231	UG2D	FR	200	2	150	106.88	1.00	78.5	0.06900	1.0	5.5	4.855	0.218	1.0	584.56950
D250	1N4937	FR	600	1	150	23.75	-3.3m	44.5	0.06900	1.0	5.5	1.889	0.054	1.0	56.30130
D251	ERB91-02	FR	200	1	150	45.63	8.1m	43.3	0.06900	1.0	5.5	1.822	0.054	1.0	54.30653
D280	MBR3045PT	SCHOTTKY	45	30	150	30.63	5.98	37.5	0.00300	1.0	5.5	1.520	0.393	1.0	14.32117
D284	1N4002	GENERAL	100	1	175	2.06	-1.2m	48.1	0.00380	1.0	5.5	2.111	0.054	1.0	3.46540
D301	1N4148	GENERAL	75	.2	200	1.31	-304.8u	28.5	0.00380	1.0	5.5	1.127	0.054	1.0	1.84997
D302	RLS4148	GENERAL	75	.2	200	5.31	-329.8u	30.7	0.00380	1.0	5.5	1.215	0.054	1.0	1.99443
D303	1N4148	GENERAL	75	.2	200	531.3m	-143.6u	29.4	0.00380	1.0	5.5	1.164	0.054	1.0	1.91125
D304	RLS4148	GENERAL	75	.2	200	5.88	-59.8u	30.5	0.00380	1.0	5.5	1.207	0.054	1.0	1.98108
D305	RLS4148	GENERAL	75	.2	200	1.44	3.1m	39.0	0.00380	1.0	5.5	1.593	0.054	1.0	2.61484
D502	1N4937	FR	600	1	150	355.00	36.7m	43.6	0.06900	1.0	5.5	1.840	0.279	1.0	283.66780
D503	ERB91-02	FR	200	1	150	67.19	4.4m	39.6	0.06900	1.0	5.5	1.621	0.071	1.0	63.16760
D504	BAV20	GENERAL	200	.25	175	96.88	-36.7m	45.9	0.00380	1.0	5.5	1.976	0.172	1.0	10.31887
D505	SB360	SCHOTTKY	60	3	150	34.69	1.36	62.1	0.00300	1.0	5.5	3.150	0.264	1.0	19.96644
D531	1N4002	GENERAL	100	1	175	10.94	4.8m	37.7	0.00380	1.0	5.5	1.529	0.054	1.0	2.51049
ZD120	1N4744A	ZENER	15.75	.061	200	14.06	12.4m	67.5	0.00200	1.0	5.5	2.238	1.000	1.0	35.80692
ZD123	1N4734A	ZENER	5.6	1	200	1.91	54.0m	44.0	0.00200	1.0	5.5	1.474	1.000	1.0	23.58214
TOTAL															**1250.395**

COMPONENT FAILURE RATE ANALYSIS

DIODE

Model NO. : PS-5251-2DFS		INPUT : 115VAC			OUTPUT : MAX LOAD AT : 25 ℃									REV. G Page 8
RATING						STRESS			$\lambda p = \lambda b * \pi E * \pi Q * \pi T * \pi S * \pi C * 1000$						
Location	P/N	TYPE	V(rate)	If(A)	Tj(℃)	Vr(V)	If(A)	Tj(℃)	λb	πE	πQ	πT	πS	πC	λP
ZD400	RD12EB3	ZENER	12.3	.2	175	8.44	328.0u	38.6	0.00200	1.0	5.5	1.327	1.000	1.0	21.22591
ZD502	ERD5.1EB2	ZENER	5.18	.096	175	5.16	2.4m	41.3	0.00200	1.0	5.5	1.398	1.000	1.0	22.36799
ZD503	RD15EB3	ZENER	15.02	.033	175	10.16	2.2m	55.6	0.00200	1.0	5.5	1.825	1.000	1.0	29.19850
ZD531	RD11EB3	ZENER	11.26	.044	175	1.19	165.5m	74.6	0.00200	1.0	5.5	2.515	1.000	1.0	40.24212
TOTAL															**113.0345**

COMPONENT FAILURE RATE ANALYSIS

TRANSFORMER

Model NO. : PS-5251-2DFS INPUT : 115VAC OUTPUT : MAX LOAD AT : 25 ℃ REV. G Page 9							
RATING			STRESS	$\lambda p = \lambda b * \pi E * \pi Q * 1000$			
Location	MAKER	TYPE	Ths(℃)	λb	πE	πQ	λP
T120	LITON	ERL-35 PC40	60.3	0.00319	1.0	30.0	95.60547
T501	LITON	EE-19 PC40	45.9	0.00257	1.0	30.0	77.11378
TOTAL							**172.7193**

COMPONENT FAILURE RATE ANALYSIS

TRANSISTOR

Model NO. : PS-5251-2DFS INPUT : 115VAC OUTPUT : MAX LOAD AT : 25 ℃ REV. G Page 10

RATING					STRESS			$\lambda p = \lambda b * \pi R * \pi Q * \pi A * \pi S * \pi T * \pi E * 1000$							
Location	P/N	Vce(rate)(V)	Ie(A)	Tj(℃)	Vce(V)	Ie(A)	Tj(℃)	λb	πR	πQ	πA	πS	πT	πE	λP
Q121	MPSA42	300	.5	150	56.25	4.6m	64.4	0.00074	0.840	8.0	0.700	0.080	2.291	1.0	0.64204
Q122	MPSA92	300	.5	150	146.88	1.8m	68.2	0.00074	0.840	8.0	0.700	0.205	2.455	1.0	1.75513
Q251	KSA916Y	120	.8	150	31.88	9.1m	42.7	0.00074	0.962	8.0	0.700	0.103	1.488	1.0	0.60812
Q301	2SC1815	50	.15	125	5.31	1.3m	31.7	0.00074	0.712	8.0	1.500	0.063	1.168	1.0	0.46224
Q302	KSR2202	50	.1	150	6.09	623.5u	28.3	0.00074	0.641	8.0	0.700	0.066	1.081	1.0	0.18833
Q303	2SA1015	50	.15	150	4.31	57.4m	36.4	0.00074	0.712	8.0	0.700	0.059	1.298	1.0	0.22523
Q311	KST2907A	60	.6	150	390.6m	4.1m	48.5	0.00074	0.678	8.0	1.500	0.046	1.679	1.0	0.46411
Q314	KST2222A	40	.6	150	281.3m	1.3m	38.1	0.00074	0.678	8.0	0.700	0.046	1.347	1.0	0.17408
Q531	KSA916Y	120	.8	150	10.63	2.0m	37.4	0.00074	0.962	8.0	0.700	0.059	1.328	1.0	0.31343
Q580	KST2907A	60	.6	150	2.44	3.8m	31.8	0.00074	0.678	8.0	0.700	0.051	1.170	1.0	0.16785
TOTAL															**5.00056**

COMPONENT FAILURE RATE ANALYSIS

IC

Model NO. : PS-5251-2DFS INPUT : 115VAC OUTPUT : MAX LOAD AT : 25 ℃ REV. G Page 11

RATING						STRESS			$\lambda p = (C1 * \pi T + C2 * \pi E) * \pi Q * \pi L * 1000$						
Location	MAKER	TYPE	Vcc(V)	I(A)	Tj(℃)	Vcc(V)	I(A)	Tj(℃)	πQ	C1	πT	C2	πE	πL	λP
IC230	STM	7912ACV	35	1.5	125	12.83	944.7m	40.8	10.0	.01	0.358	0.001	.5	1.000	41.67119
IC511	SAMSU	KA431AZ	37	.15	150	11.25	913.7u	39.3	10.0	.01	0.319	0.001	.5	1.000	37.81973
IC600	SAMSU	KA431AZ	37	.15	150	5.06	26.0m	25.3	10.0	.01	0.103	0.001	.5	1.000	16.19373
IC300	MOTOR	UC3845BN	30	1	150	17.03	55.0m	67.8	10.0	.01	2.397	0.003	.5	1.000	256.73520
IC400	STM	TSM111CN	36	.03	150	19.69	6.1m	51.0	10.0	.01	0.763	0.001	.5	1.000	80.08810
TOTAL															**432.508**

COMPONENT FAILURE RATE ANALYSIS

MOSFET

Model NO. : PS-5251-2DFS INPUT : 115VAC OUTPUT : MAX LOAD AT : 25 ℃ REV. G Page 12															
RATING							STRESS			$\lambda p = \lambda b * \pi E * \pi Q * \pi T * \pi A * 1000$					
Location	MAKER	TYPE	Vds(V)	Id(A)	Pr(W)	Tj(℃)	Vds(V)	Id(A)	Tj(℃)	λb	πE	πQ	πT	πA	λP
IC501	POWER	TNY267P	700	.4	0	150	506.25	118.1m	39.3	.012	1.0	5.5	1.344	0.700	62.08404
Q120	TOSHB	2SK2611	900	9	150	150	637.50	2.18	47.6	.012	1.0	5.5	1.578	8.000	833.17500
TOTAL															**895.259**

COMPONENT FAILURE RATE ANALYSIS

CHOKE

Model NO. : PS-5251-2DFS INPUT : 115VAC OUTPUT : MAX LOAD AT : 25 ℃ REV. G Page 13

RATING			STRESS	$\lambda p = \lambda b * \pi E * \pi Q * \pi C * 1000$				
Location	MAKER	TYPE	Ths(℃)	λb	πE	πQ	πC	λP
L100	LITON	EEL-25	28.3	0.00042	1.0	20.0	1.0	8.48971
L101	LITON	TR18*10*10	30.5	0.00043	1.0	20.0	1.0	8.59351
L102	LITON	EE43*35	25.3	0.00042	1.0	20.0	1.0	8.36601
L200	LITON	T106-52	52.7	0.00053	1.0	20.0	1.0	10.62250
L201	LITON	R4*10	55.8	0.00056	1.0	20.0	1.0	11.13955
L210	LITEON	R5*25	29.2	0.00043	1.0	20.0	1.0	8.52991
L280	LITON	MAG AMP W760	59.2	0.00059	1.0	20.0	1.0	11.82634
L281	LITON	T68-52D	29.8	0.00043	1.0	20.0	1.0	8.56120
L282	LITON	R4*10	51.0	0.00052	1.0	20.0	1.0	10.36385
L501	LITON	DR6*8.3	49.6	0.00051	1.0	20.0	1.0	10.18530
TOTAL								**96.67789**

COMPONENT FAILURE RATE ANALYSIS

PHOTO-COUPLE

Model NO. : PS-5251-2DFS INPUT : 115VAC OUTPUT : MAX LOAD AT : 25 ℃ REV. G Page 14

RATING							STRESS			$\lambda p = \lambda b * \pi E * \pi Q * \pi T * 1000$				
Location	MAKER	P/N	TYPE	Vr(V)	If(A)	Tj(℃)	Vr(V)	If(A)	Tj(℃)	λb	πE	πQ	πT	λP
PC301	LITON	LTV817B	TRANSISTOR	35	.05	125	3.63	5.7m	59.5	0.00550	1.0	8.0	2.644	116.34970
PC3012	LITON	LTV817B	DIODE	6	.05	125	1.36	5.8m	56.7	0.00400	1.0	8.0	2.461	78.76166
PC401	LITON	LTV817B	TRANSISTOR	35	.05	125	1.81	19.6m	48.9	0.00550	1.0	8.0	2.001	88.05838
PC4012	LITON	LTV817B	DIODE	6	.05	125	1.59	26.2m	53.0	0.00400	1.0	8.0	2.236	71.54125
PC501	LITON	LTV817B	TRANSISTOR	35	.05	125	1.88	870.5u	55.7	0.00550	1.0	8.0	2.396	105.40390
PC5012	LITON	LTV817B	DIODE	6	.05	125	1.44	9.4m	60.6	0.00400	1.0	8.0	2.716	86.92180
PC502	LITON	LTV817B	TRANSISTOR	35	.05	125	10.63	6.4m	61.8	0.00550	1.0	8.0	2.800	123.21580
PC5022	LITON	LTV817B	DIODE	6	.05	125	1.42	4.8m	59.9	0.00400	1.0	8.0	2.666	85.31056
TOTAL														**755.5631**

COMPONENT FAILURE RATE ANALYSIS

THERMISTOR

Model NO. : PS-5251-2DFS	INPUT : 115VAC	OUTPUT : MAX LOAD AT : 25 ℃			REV. G	Page 15
RATING			$\lambda p = \lambda b * \pi E * \pi Q * 1000$			
Location	MAKER	TYPE	λb	πE	πQ	λP
RT531	THINK	SCK-103	.065	1.0	1.0	65.00000
TOTAL						**65.000**

PS-5251-2DFS MTBF REPORT LIST REV. G 02-14-2003

COMPONENT	FAILURE RATE	Q'TY	PAGE NO.
Resistor	260.64	68	1, 2, 3
Capacitor	2980.31	69	4, 5, 6
Diode	1573.06	29	7, 8
Transformer	174.11	2	9
Transistor	4.47	10	10
IC	319.15	5	11
MOSFET	903.68	2	12
Choke	111.15	10	13
Photo-Couple	736.62	8	14
Thermistor	65.00	1	15
TOTAL	**7128.21**	**204**	
MTBF	**140287 HOURS**		

REFER DOCUMENT : MIL - HDBK 217F

CUSTOMER MTBF SPEC. : 125,000 Hours

ACTUAL MTBF : 140,287 Hours

JUDGE : OK

PREPARED : 張家祥 Feb, 14'03 CHECK :

APPROVED : 林信揚 Feb. 14'03

COMPONENT FAILURE RATE ANALYSIS

RESISTOR

Model NO. : PS-5251-2DFS INPUT : 230VAC OUTPUT : MAX LOAD AT : 25 ℃ REV. G Page 1

RATING				STRESS				$\lambda p = \lambda b * \pi E * \pi R * \pi Q * 1000$				
Location	TYPE	OHM	W(rate)	Vac(V)	Vdc(V)	Vrms(V)	Watt	λb	πE	πR	πQ	λP
R100	R.MO(S)	910K	.5	229.42	333.3m	229.42	57.8m	0.00078	1.0	1.100	5.0	4.28829
R120	R.CF	680K	.25	3.82	133.82	133.87	26.4m	0.00077	1.0	1.100	5.0	4.24057
R121	R.CF	680K	.25	3.8	131.47	131.52	25.4m	0.00077	1.0	1.100	5.0	4.22362
R122	R.CF(S)	1K	.25	4.89	2.97	5.72	32.7m	0.00079	1.0	1.000	5.0	3.96390
R123	R.MO	0.1	2	237.4m	107.2m	260.5m	678.5m	0.00100	1.0	1.000	5.0	4.97588
R124	R.MO(S)	1	.5	250.6m	128.1m	281.5m	79.2m	0.00082	1.0	1.000	5.0	4.08469
R125	R.MO(S)	1M	.5	8.32	250.13	250.27	62.6m	0.00079	1.0	1.100	5.0	4.33342
R126	R.MF	39K	.125	178.6m	10.52	10.52	2.8m	0.00070	1.0	1.000	5.0	3.52223
R129	R.MO(S)	1M	.5	3.14	142.84	142.87	20.4m	0.00072	1.0	1.100	5.0	3.95184
R200	R.MO(S)	10	.5	577.9m	0.0m	577.9m	33.4m	0.00074	1.0	1.000	5.0	3.69588
R201	R.MO(S)	10	.5	724.2m	0.7m	724.2m	52.4m	0.00077	1.0	1.000	5.0	3.85283
R202	R.CF	100	.125	23.4m	11.9m	26.2m	6.9u	0.00069	1.0	1.000	5.0	3.43620
R220	R.MO	47	1	2.3m	0.0m	2.3m	0.1u	0.00069	1.0	1.000	5.0	3.43600
R221	R.CF	100	.125	285.3m	12.4m	285.6m	815.5u	0.00069	1.0	1.000	5.0	3.46055
R223	R.MO(S)	330	1	3.9m	12.15	12.15	447.3m	0.00112	1.0	1.000	5.0	5.59915
R224	R.ZW	0.0050	30	78.3m	78.3m	110.8m	2.45	0.00075	1.0	1.000	5.0	3.75703
R250	R.CF	220	.1	34.7m	694.0m	694.9m	2.2m	0.00070	1.0	1.000	5.0	3.51931
R251	R.MO(S)	100	.5	28.0m	96.8m	100.8m	101.6u	0.00069	1.0	1.000	5.0	3.43676
R252	R.CF	1K	.125	10.4m	143.0m	143.3m	20.5u	0.00069	1.0	1.000	5.0	3.43661
R280	R.MO(S)	10	.5	639.6m	0.0m	639.6m	40.9m	0.00075	1.0	1.000	5.0	3.75702
R281	R.CF	100	.125	27.6m	5.5m	28.2m	7.9u	0.00069	1.0	1.000	5.0	3.43623
R282	R.MO(S)	30	1	3.8m	3.49	3.49	406.0m	0.00107	1.0	1.000	5.0	5.35212
R301	R.CF	1M	.125	100.5m	17.0m	101.9m	0.0u	0.00069	1.0	1.100	5.0	3.77960
R302	R.MF	12.4K	.125	438.5m	2.66	2.70	586.1u	0.00069	1.0	1.000	5.0	3.45363
R303	R.CF	10K	.1	69.2m	1.12	1.12	125.9u	0.00069	1.0	1.000	5.0	3.44072
TOTAL												**98.4341**

COMPONENT FAILURE RATE ANALYSIS

RESISTOR

Model NO. : PS-5251-2DFS INPUT : 230VAC OUTPUT : MAX LOAD AT : 25 ℃ REV. G Page 2

RATING				STRESS				$\lambda p = \lambda b * \pi E * \pi R * \pi Q * 1000$				
Location	TYPE	OHM	W(rate)	Vac(V)	Vdc(V)	Vrms(V)	Watt	λb	πE	πR	πQ	λP
R304	R.CF	10K	.125	299.3m	1.96	1.98	393.1u	0.00069	1.0	1.000	5.0	3.44781
R305	R.CF	330	.1	169.5m	1.96	1.97	11.7m	0.00078	1.0	1.000	5.0	3.90528
R306	R.CF	39K	.125	5.33	3.15	6.19	982.9u	0.00069	1.0	1.000	5.0	3.46561
R307	R.CF	3K	.125	251.1m	12.81	12.81	54.7m	0.00111	1.0	1.000	5.0	5.54088
R308	R.CF	20	.1	560.1m	85.1m	566.5m	16.0m	0.00082	1.0	1.000	5.0	4.09378
R309	R.CF	1K	.125	553.4m	118.9m	566.0m	320.4u	0.00069	1.0	1.000	5.0	3.44562
R3101	R.CF	1.3K	.1	56.2m	787.6m	789.6m	479.6u	0.00069	1.0	1.000	5.0	3.45403
R311	R.CF	1K	.1	373.4m	0.1m	373.4m	139.4u	0.00069	1.0	1.000	5.0	3.44123
R3121	R.CF	10000	.1	68.3m	2.26	2.26	511.2u	0.00069	1.0	1.000	5.0	3.45522
R3122	R.CF	39K	.1	50.8m	1.61	1.61	66.5u	0.00069	1.0	1.000	5.0	3.43849
R313	R.CF	110	.1	358.6m	271.3m	449.6m	1.8m	0.00070	1.0	1.000	5.0	3.50563
R314	R.CF	1K	.1	351.0m	3.67	3.69	13.6m	0.00080	1.0	1.000	5.0	3.98555
R315	R.CF	10	.1	19.7m	35.1m	40.3m	162.5u	0.00069	1.0	1.000	5.0	3.44210
R330	R.CF	100	.1	36.5m	333.8m	335.8m	1.1m	0.00070	1.0	1.000	5.0	3.47854
R331	R.CF	10	.1	15.2m	89.1m	90.4m	816.9u	0.00069	1.0	1.000	5.0	3.46677
R332	R.MF	866	.1	26.0m	916.7m	917.0m	971.1u	0.00069	1.0	1.000	5.0	3.47261
R333	R.CF	20K	.1	115.2m	0.1m	115.2m	0.7u	0.00069	1.0	1.000	5.0	3.43602
R334	R.MF	2.49K	.1	47.1m	2.49	2.49	2.5m	0.00071	1.0	1.000	5.0	3.53070
R340	R.MF	10K	.1	21.9m	0.0m	21.9m	0.0u	0.00069	1.0	1.000	5.0	3.43600
R400	R.CF	200	.1	27.3m	824.2m	824.6m	3.4m	0.00071	1.0	1.000	5.0	3.56592
R401	R.MO	33K	.1	641.5m	19.99	20.00	12.1m	0.00078	1.0	1.000	5.0	3.92208
R402	R.CF	6.2K	.25	689.9m	22.53	22.54	81.9m	0.00098	1.0	1.000	5.0	4.91414
R410	R.MF	523	.125	33.5m	72.2m	79.6m	12.1u	0.00069	1.0	1.000	5.0	3.43636
R411	R.MF	75K	.1	101.4m	4.92	4.92	322.9u	0.00069	1.0	1.000	5.0	3.44813
R412	R.CF	620	.1	20.3m	15.2m	25.4m	1.0u	0.00069	1.0	1.000	5.0	3.43604
TOTAL												**92.16455**

COMPONENT FAILURE RATE ANALYSIS

RESISTOR

Model NO. : PS-5251-2DFS INPUT : 230VAC OUTPUT : MAX LOAD AT : 25 ℃ REV. G Page 3

RATING				STRESS				$\lambda p = \lambda b * \pi E * \pi R * \pi Q * 1000$				
Location	TYPE	OHM	W(rate)	Vac(V)	Vdc(V)	Vrms(V)	Watt	λb	πE	πR	πQ	λP
R413	R.CF	100K	.1	31.0m	3.52	3.52	123.9u	0.00069	1.0	1.100	5.0	3.78471
R415	R.CF	100K	.1	35.1m	12.16	12.16	1.5m	0.00070	1.0	1.100	5.0	3.84110
R416	R.CF	1K	.1	40.4m	638.6m	639.9m	409.4u	0.00069	1.0	1.000	5.0	3.45139
R417	R.CF	6.8K	.1	53.3m	14.78	14.78	32.1m	0.00098	1.0	1.000	5.0	4.87919
R500	R.MO(S)	1	.5	44.1m	44.4m	62.6m	3.9m	0.00069	1.0	1.000	5.0	3.46555
R503	R.CF	10K	.125	209.8m	12.57	12.57	15.8m	0.00079	1.0	1.000	5.0	3.94451
R504	R.CF	1.5M	.25	10.33	123.33	123.76	10.2m	0.00072	1.0	1.600	5.0	5.74826
R510	R.CF	1.5M	.25	17.32	122.9	124.11	10.3m	0.00072	1.0	1.600	5.0	5.74972
R531	R.MF	200	.1	8.5m	998.0m	998.0m	5.0m	0.00073	1.0	1.000	5.0	3.62795
R580	R.CF	750	.1	16.6m	783.6m	783.8m	819.2u	0.00069	1.0	1.000	5.0	3.46686
R581	R.CF	560	.1	1.5m	245.0m	245.0m	107.2u	0.00069	1.0	1.000	5.0	3.44002
R632	R.CF	47	.125	11.0m	78.0m	78.7m	131.9u	0.00069	1.0	1.000	5.0	3.43996
R633	R.CF	10K	.125	4.9m	2.49	2.49	620.0u	0.00069	1.0	1.000	5.0	3.45465
R634	R.CF	10K	.125	8.0m	2.51	2.51	630.0u	0.00069	1.0	1.000	5.0	3.45495
R636	R.CF	1K	.125	17.9m	985.6m	985.7m	971.7u	0.00069	1.0	1.000	5.0	3.46528
R640	R.MF	5.11K	.1	8.5m	4.85	4.85	4.6m	0.00072	1.0	1.000	5.0	3.61306
VR301	R.VR	100K	.1	58.4m	1.52	1.52	23.1u	0.00069	1.0	1.100	5.0	3.78055
VR401	R.VR	500	.1	0.7m	22.5m	22.6m	1.0u	0.00069	1.0	1.000	5.0	3.43603
TOTAL												**70.04372**

COMPONENT FAILURE RATE ANALYSIS

CAPACITOR

Model NO. : PS-5251-2DFS	INPUT : 230VAC	OUTPUT : MAX LOAD AT : 25 ℃	REV. G	Page 4

RATING				STRESS	$\lambda p = \lambda b * \pi E * \pi Q * \pi CV * 1000$				
Location	TYPE	CAP.	V(rate)	V	λb	πE	πQ	πCV	λP
C100	ELE	22uF	50	25.00	0.02393	1.0	3.000	0.593	42.58621
C101	MEX	0.22UF	400	325.00	0.03862	1.0	10.000	0.967	373.50880
C102	MEX	0.33UF	400	226.17	0.00721	1.0	10.000	1.001	72.19215
C103	DIS	1000PF	400	106.46	0.00108	1.0	3.000	0.877	2.83273
C104	DIS	1000PF	400	117.59	0.00134	1.0	3.000	0.877	3.52005
C105	DIS	470PF	400	282.81	0.00972	1.0	3.000	0.807	23.51670
C106	DIS	470PF	400	282.81	0.00972	1.0	3.000	0.807	23.51670
C108	DIS	2200PF	400	82.81	0.00092	1.0	3.000	0.956	2.62787
C120	ELE	680UF	200	157.81	0.05900	1.0	3.000	1.100	194.67500
C121	ELE	680UF	200	170.31	0.07109	1.0	3.000	1.100	234.55000
C122	DIS	0.01UF	500	278.13	0.00509	1.0	3.000	1.129	17.23006
C123	DIS	470PF	1000	226.56	0.00099	1.0	3.000	0.807	2.38790
C124	DIS	0.01UF	500	328.13	0.00791	1.0	3.000	1.129	26.79303
C125	MON	0.01UF	50	12.50	0.00109	1.0	3.000	1.129	3.68837
C200	MON	4700PF	50	28.75	0.00510	1.0	3.000	1.039	15.90182
C201	PEI	4700PF	100	41.88	0.00245	1.0	10.000	0.697	17.09537
C202	ELE	2200UF	10	6.06	0.03327	1.0	3.000	1.359	135.62510
C203	ELE	2200UF	10	5.38	0.02688	1.0	3.000	1.359	109.54780
C205	ELE	10UF	50	593.8m	0.01197	1.0	3.000	0.515	18.47603
C206	MON	0.22UF	50	24.38	0.00365	1.0	3.000	1.587	17.37625
C220	MON	1000PF	100	56.25	0.00482	1.0	3.000	0.877	12.66327
C222	ELE	10UF	50	281.3m	0.01197	1.0	3.000	0.515	18.47581
C223	ELE	2200UF	16	12.66	0.05940	1.0	3.000	1.359	242.09670
C224	ELE	220UF	25	14.69	0.03139	1.0	3.000	0.898	84.53716
C230	ELE	470UF	16	12.75	0.06041	1.0	3.000	1.029	186.51600
TOTAL									**1881.937**

COMPONENT FAILURE RATE ANALYSIS

CAPACITOR

Model NO. : PS-5251-2DFS INPUT : 230VAC OUTPUT : MAX LOAD AT : 25 ℃ REV. G Page 5

RATING				STRESS	$\lambda p = \lambda b * \pi E * \pi Q * \pi CV * 1000$				
Location	TYPE	CAP.	V(rate)	V	λb	πE	πQ	πCV	λP
C233	ELE	47uF	50	12.06	0.01331	1.0	3.000	0.680	27.15104
C280	PEI	4700PF	100	22.81	0.00115	1.0	10.000	0.697	8.02702
C281	ELE	3300UF	6.3	3.50	0.02838	1.0	3.000	1.462	124.45230
C282	ELE	4700UF	6.3	3.50	0.02838	1.0	3.000	1.558	132.63190
C283	ELE	10UF	50	531.3m	0.01197	1.0	3.000	0.515	18.47596
C301	MON	0.1UF	50	1.56	0.00069	1.0	3.000	1.455	3.01316
C302	MON	0.1UF	50	6.56	0.00075	1.0	3.000	1.455	3.26152
C304	MON	1000PF	100	2.03	0.00069	1.0	3.000	0.877	1.81413
C305	MON	0.022UF	50	5.16	0.00072	1.0	3.000	1.232	2.65173
C306	MON	470PF	50	4.22	0.00065	1.0	3.000	0.807	1.56927
C307	ELE	4.7UF	50	5.94	0.01213	1.0	3.000	0.449	16.34433
C3101	MON	1000PF	50	3.25	0.00064	1.0	3.000	0.877	1.68499
C3102	ELE	10UF	50	18.13	0.01653	1.0	3.000	0.515	25.52233
C311	MON	0.1UF	25	3.13	0.00074	1.0	3.000	1.455	3.22854
C312	MON	0.1UF	25	9.69	0.00218	1.0	3.000	1.455	9.50092
C313	MON	0.1UF	50	109.4m	0.00069	1.0	3.000	1.455	3.00977
C330	MON	0.47UF	16	3.44	0.00094	1.0	3.000	1.725	4.88178
C331	MON	100PF	50	328.1m	0.00063	1.0	3.000	0.680	1.29481
C332	MON	0.1UF	25	171.9m	0.00069	1.0	3.000	1.455	3.00981
C340	MON	0.1UF	50	1.34	0.00069	1.0	3.000	1.455	3.01192
C400	ELE	6.8UF	50	8.13	0.01238	1.0	3.000	0.480	17.82951
C401	ELE	2.2UF	50	4.84	0.01205	1.0	3.000	0.392	14.17030
C402	MON	1000PF	50	5.00	0.00066	1.0	3.000	0.877	1.72980
C403	MON	0.1UF	25	265.6m	0.00063	1.0	3.000	1.455	2.76835
C404	MON	0.1UF	25	468.8m	0.00063	1.0	3.000	1.455	2.76890
TOTAL									**433.804**

COMPONENT FAILURE RATE ANALYSIS

CAPACITOR

Model NO. : PS-5251-2DFS INPUT : 230VAC OUTPUT : MAX LOAD AT : 25 ℃ REV. G Page 6									
RATING				STRESS	$\lambda p = \lambda b * \pi E * \pi Q * \pi CV * 1000$				
Location	TYPE	CAP.	V(rate)	V	λb	πE	πQ	πCV	λP
C416	MON	0.1UF	25	5.06	0.00090	1.0	3.000	1.455	3.93405
C417	MON	0.1UF	25	4.44	0.00083	1.0	3.000	1.455	3.63423
C418	MON	0.1UF	25	4.94	0.00089	1.0	3.000	1.455	3.86984
C419	MON	0.1UF	25	5.44	0.00095	1.0	3.000	1.455	4.15832
C501	ELE	100UF	35	20.31	0.03068	1.0	3.000	0.779	71.67802
C502	MON	0.1UF	50	15.94	0.00152	1.0	3.000	1.455	6.62158
C503	ELE	1000UF	10	6.00	0.03265	1.0	3.000	1.179	115.46420
C504	ELE	470UF	10	5.94	0.03203	1.0	3.000	1.029	98.89548
C505	ELE	100UF	25	20.00	0.06099	1.0	3.000	0.779	142.50570
C509	MON	0.1UF	25	2.34	0.00065	1.0	3.000	1.455	2.85230
C510	ELE	1000UF	10	5.88	0.03143	1.0	3.000	1.179	111.16300
C510S	MON	0.47UF	16	843.8m	0.00069	1.0	3.000	1.725	3.58771
C511	MON	1UF	25	3.13	0.00068	1.0	3.000	1.874	3.82537
C511S	DIS	0.01UF	1000	19.69	0.00063	1.0	3.000	1.129	2.14943
C512	MON	1UF	25	13.75	0.00454	1.0	3.000	1.874	25.54100
C531	ELE	22UF	50	4.88	0.01206	1.0	3.000	0.593	21.45148
C580	ELE	47UF	25	5.31	0.01288	1.0	3.000	0.680	26.28198
C600	ELE	2.2UF	50	4.41	0.01203	1.0	3.000	0.392	14.14544
C631	MON	0.1UF	50	3.81	0.00064	1.0	3.000	1.455	2.81359
TOTAL									**664.5728**

COMPONENT FAILURE RATE ANALYSIS

DIODE

Model NO. : PS-5251-2DFS INPUT : 230VAC OUTPUT : MAX LOAD AT : 25 ℃ REV. G Page 7

		RATING				STRESS			$\lambda p = \lambda b * \pi E * \pi Q * \pi T * \pi S * \pi C * 1000$						
Location	P/N	TYPE	V(rate)	If(A)	Tj(℃)	Vr(V)	If(A)	Tj(℃)	λb	πE	πQ	πT	πS	πC	λP
D100	GBU808	BRIDGE	800	8	150	325.00	1.35	49.4	0.00500	1.0	5.5	2.190	0.112	1.0	9.81675
D102	1N4007	GENERAL	1000	1	175	1.94	476.3u	40.1	0.00380	1.0	5.5	1.651	0.054	1.0	2.71057
D103	1N4007	GENERAL	1000	1	175	4.06	296.0u	43.3	0.00380	1.0	5.5	1.824	0.054	1.0	2.99381
D120	BYV-26E	GENERAL	1000	1	175	643.75	-123.2m	51.2	0.00380	1.0	5.5	2.310	0.343	1.0	24.08113
D200	MBR3045CT	SCHOTTKY	45	30	150	31.38	10.71	70.1	0.00300	1.0	5.5	3.909	0.416	1.0	39.07147
D201	MBR3045PT	SCHOTTKY	45	30	150	31.88	10.87	63.9	0.00300	1.0	5.5	3.308	0.433	1.0	34.36207
D202	BAV20	GENERAL	200	.25	175	26.25	8.1m	58.6	0.00380	1.0	5.5	2.864	0.054	1.0	4.70091
D220	MBR20100CT	SCHOTTKY	100	20	150	65.63	6.49	60.9	0.00300	1.0	5.5	3.053	0.359	1.0	26.33305
D231	UG2D	FR	200	2	150	104.69	763.2m	70.9	0.06900	1.0	5.5	3.995	0.207	1.0	457.41760
D250	1N4937	FR	600	1	150	24.53	-3.6m	43.4	0.06900	1.0	5.5	1.827	0.054	1.0	54.44702
D251	ERB91-02	FR	200	1	150	43.13	8.0m	43.6	0.06900	1.0	5.5	1.839	0.054	1.0	54.81022
D280	MBR3045PT	SCHOTTKY	45	30	150	33.13	5.98	69.8	0.00300	1.0	5.5	3.882	0.475	1.0	44.26643
D284	1N4002	GENERAL	100	1	175	1.94	-1.1m	48.4	0.00380	1.0	5.5	2.130	0.054	1.0	3.49640
D301	1N4148	GENERAL	75	.2	200	1.94	-197.2u	28.3	0.00380	1.0	5.5	1.122	0.054	1.0	1.84207
D302	RLS4148	GENERAL	75	.2	200	5.25	-232.4u	30.1	0.00380	1.0	5.5	1.191	0.054	1.0	1.95464
D303	1N4148	GENERAL	75	.2	200	562.5m	-29.2u	28.9	0.00380	1.0	5.5	1.144	0.054	1.0	1.87743
D304	RLS4148	GENERAL	75	.2	200	5.69	-262.1u	29.9	0.00380	1.0	5.5	1.183	0.054	1.0	1.94153
D305	RLS4148	GENERAL	75	.2	200	5.00	3.4m	38.6	0.00380	1.0	5.5	1.573	0.054	1.0	2.58182
D502	1N4937	FR	600	1	150	405.00	37.3m	51.3	0.06900	1.0	5.5	2.322	0.385	1.0	493.09470
D503	ERB91-02	FR	200	1	150	71.88	3.4m	48.9	0.06900	1.0	5.5	2.163	0.083	1.0	99.30177
D504	BAV20	GENERAL	200	.25	175	95.31	-26.3m	43.8	0.00380	1.0	5.5	1.852	0.165	1.0	9.29724
D505	SB360	SCHOTTKY	60	3	150	34.06	1.40	67.0	0.00300	1.0	5.5	3.597	0.253	1.0	21.81011
D531	1N4002	GENERAL	100	1	175	11.56	4.7m	39.8	0.00380	1.0	5.5	1.635	0.054	1.0	2.68360
ZD120	1N4744A	ZENER	15.75	.061	200	13.75	12.6m	66.2	0.00200	1.0	5.5	2.190	1.000	1.0	35.03770
ZD123	1N4734A	ZENER	5.6	1	200	3.56	53.5m	42.1	0.00200	1.0	5.5	1.420	1.000	1.0	22.71227
TOTAL															**1452.642**

COMPONENT FAILURE RATE ANALYSIS

DIODE

Model NO. : PS-5251-2DFS	INPUT : 230VAC	OUTPUT : MAX LOAD AT : 25 ℃	REV. G	Page 8

RATING						STRESS			$\lambda p = \lambda b * \pi E * \pi Q * \pi T * \pi S * \pi C * 1000$						
Location	P/N	TYPE	V(rate)	If(A)	Tj(℃)	Vr(V)	If(A)	Tj(℃)	λb	πE	πQ	πT	πS	πC	λP
ZD400	RD12EB3	ZENER	12.3	.2	175	8.44	383.8u	38.7	0.00200	1.0	5.5	1.327	1.000	1.0	21.23981
ZD502	ERD5.1EB2	ZENER	5.18	.096	175	5.16	2.4m	41.6	0.00200	1.0	5.5	1.407	1.000	1.0	22.51583
ZD503	RD15EB3	ZENER	15.02	.033	175	10.16	2.1m	54.3	0.00200	1.0	5.5	1.783	1.000	1.0	28.52293
ZD531	RD11EB3	ZENER	11.26	.044	175	1.31	126.4m	86.3	0.00200	1.0	5.5	3.009	1.000	1.0	48.14003
TOTAL															**120.4186**

COMPONENT FAILURE RATE ANALYSIS

TRANSFORMER

Model NO. : PS-5251-2DFS INPUT : 230VAC OUTPUT : MAX LOAD AT : 25 ℃ REV. G Page 9							
RATING			STRESS	$\lambda p = \lambda b * \pi E * \pi Q * 1000$			
Location	MAKER	TYPE	Ths(℃)	λb	πE	πQ	λP
T120	LITON	ERL-35 PC40	61.4	0.00326	1.0	30.0	97.73145
T501	LITON	EE-19 PC40	45.0	0.00255	1.0	30.0	76.38297
TOTAL							**174.1144**

COMPONENT FAILURE RATE ANALYSIS

TRANSISTOR

Model NO. : PS-5251-2DFS INPUT : 230VAC OUTPUT : MAX LOAD AT : 25 ℃ REV. G Page 10

RATING					STRESS			$\lambda p = \lambda b * \pi R * \pi Q * \pi A * \pi S * \pi T * \pi E * 1000$							
Location	P/N	Vce(rate)(V)	Ie(A)	Tj(℃)	Vce(V)	Ie(A)	Tj(℃)	λb	πR	πQ	πA	πS	πT	πE	λP
Q121	MPSA42	300	.5	150	40.63	5.2m	66.5	0.00074	0.840	8.0	0.700	0.068	2.379	1.0	0.56729
Q122	MPSA92	300	.5	150	146.88	1.3m	60.0	0.00074	0.840	8.0	0.700	0.205	2.110	1.0	1.50822
Q251	KSA916Y	120	.8	150	29.38	8.7m	42.4	0.00074	0.962	8.0	0.700	0.096	1.480	1.0	0.56710
Q301	2SC1815	50	.15	125	5.31	1.4m	31.3	0.00074	0.712	8.0	1.500	0.063	1.159	1.0	0.45863
Q302	KSR2202	50	.1	150	6.25	646.5u	27.8	0.00074	0.641	8.0	0.700	0.066	1.068	1.0	0.18800
Q303	2SA1015	50	.15	150	4.06	56.2m	36.2	0.00074	0.712	8.0	0.700	0.058	1.293	1.0	0.22093
Q311	KST2907A	60	.6	150	390.6m	4.5m	35.1	0.00074	0.678	8.0	1.500	0.046	1.261	1.0	0.34870
Q314	KST2222A	40	.6	150	265.6m	1.4m	39.0	0.00074	0.678	8.0	0.700	0.046	1.374	1.0	0.17733
Q531	KSA916Y	120	.8	150	8.59	1.6m	33.7	0.00074	0.962	8.0	0.700	0.056	1.224	1.0	0.27401
Q580	KST2907A	60	.6	150	2.28	2.8m	31.1	0.00074	0.678	8.0	0.700	0.051	1.153	1.0	0.16401
TOTAL															**4.47424**

COMPONENT FAILURE RATE ANALYSIS

IC

Model NO. : PS-5251-2DFS INPUT : 230VAC OUTPUT : MAX LOAD AT : 25 ℃ REV. G Page 11

RATING						STRESS			$\lambda p = (C1 * \pi T + C2 * \pi E) * \pi Q * \pi L * 1000$						
Location	MAKER	TYPE	Vcc(V)	I(A)	Tj(℃)	Vcc(V)	I(A)	Tj(℃)	πQ	C1	πT	C2	πE	πL	λP
IC230	STM	7912ACV	35	1.5	125	12.97	959.3m	40.7	10.0	.01	0.356	0.001	.5	1.000	41.50277
IC511	SAMSU	KA431AZ	37	.15	150	11.25	1.4m	39.2	10.0	.01	0.316	0.001	.5	1.000	37.44667
IC600	SAMSU	KA431AZ	37	.15	150	6.06	26.6m	28.1	10.0	.01	0.130	0.001	.5	1.000	18.86360
IC300	MOTOR	UC3845BN	30	1	150	17.50	57.3m	61.7	10.0	.01	1.609	0.003	.5	1.000	177.87730
IC400	STM	TSM111CN	36	.03	150	19.69	6.1m	42.2	10.0	.01	0.397	0.001	.5	1.000	43.45850
TOTAL															**319.1488**

COMPONENT FAILURE RATE ANALYSIS

MOSFET

Model NO. : PS-5251-2DFS INPUT : 230VAC OUTPUT : MAX LOAD AT : 25 ℃ REV. G Page 12																
RATING							STRESS			$\lambda p = \lambda b * \pi E * \pi Q * \pi T * \pi A * 1000$						
Location	MAKER	TYPE	Vds(V)	Id(A)	Pr(W)	Tj(℃)	Vds(V)	Id(A)	Tj(℃)	λb	πE	πQ	πT	πA	λP	
IC501	POWER	TNY267P	700	.4	0	150	506.25	124.5m	34.5	.012	1.0	5.5	1.221	0.700	56.38897	
Q120	TOSHB	2SK2611	900	9	150	150	668.75	2.07	48.5	.012	1.0	5.5	1.605	8.000	847.29230	
TOTAL															**903.6813**	

COMPONENT FAILURE RATE ANALYSIS

CHOKE

Model NO. : PS-5251-2DFS INPUT : 230VAC OUTPUT : MAX LOAD AT : 25 ℃ REV. G Page 13								
RATING			STRESS	$\lambda p = \lambda b * \pi E * \pi Q * \pi C * 1000$				
Location	MAKER	TYPE	Ths(℃)	λb	πE	πQ	πC	λP
L100	LITON	EEL-25	34.9	0.00044	1.0	20.0	1.0	8.83767
L101	LITON	TR18*10*10	44.5	0.00048	1.0	20.0	1.0	9.59410
L102	LITON	EE43*35	47.9	0.00050	1.0	20.0	1.0	9.96587
L200	LITON	T106-52	55.5	0.00055	1.0	20.0	1.0	11.07984
L201	LITON	R4*10	55.5	0.00055	1.0	20.0	1.0	11.07984
L210	LITEON	R5*25	29.8	0.00043	1.0	20.0	1.0	8.56120
L280	LITON	MAG AMP W760	59.4	0.00059	1.0	20.0	1.0	11.87542
L281	LITON	T68-52D	78.0	0.00099	1.0	20.0	1.0	19.83073
L282	LITON	R4*10	50.7	0.00052	1.0	20.0	1.0	10.33321
L501	LITON	DR6*8.3	48.1	0.00050	1.0	20.0	1.0	9.99219
TOTAL								**111.1501**

COMPONENT FAILURE RATE ANALYSIS

PHOTO-COUPLE

Model NO. : PS-5251-2DFS INPUT : 230VAC OUTPUT : MAX LOAD AT : 25 ℃ REV. G Page 14

RATING							STRESS			$\lambda p = \lambda b * \pi E * \pi Q * \pi T * 1000$				
Location	MAKER	P/N	TYPE	Vr(V)	If(A)	Tj(℃)	Vr(V)	If(A)	Tj(℃)	λb	πE	πQ	πT	λP
PC301	LITON	LTV817B	TRANSISTOR	35	.05	125	3.50	5.8m	58.3	0.00550	1.0	8.0	2.560	112.62730
PC3012	LITON	LTV817B	DIODE	6	.05	125	1.42	5.5m	55.3	0.00400	1.0	8.0	2.370	75.84783
PC401	LITON	LTV817B	TRANSISTOR	35	.05	125	1.56	16.5m	47.4	0.00550	1.0	8.0	1.926	84.73644
PC4012	LITON	LTV817B	DIODE	6	.05	125	1.94	25.2m	52.2	0.00400	1.0	8.0	2.190	70.07500
PC501	LITON	LTV817B	TRANSISTOR	35	.05	125	1.75	834.0u	56.2	0.00550	1.0	8.0	2.426	106.75840
PC5012	LITON	LTV817B	DIODE	6	.05	125	1.31	9.4m	61.1	0.00400	1.0	8.0	2.751	88.02850
PC502	LITON	LTV817B	TRANSISTOR	35	.05	125	10.63	6.1m	59.8	0.00550	1.0	8.0	2.665	117.25620
PC5022	LITON	LTV817B	DIODE	6	.05	125	1.47	4.8m	58.0	0.00400	1.0	8.0	2.540	81.29145
TOTAL														**736.6212**

COMPONENT FAILURE RATE ANALYSIS

THERMISTOR

Model NO. : PS-5251-2DFS	INPUT : 230VAC	OUTPUT : MAX LOAD AT : 25 ℃				REV. G	Page 15
RATING			$\lambda p = \lambda b * \pi E * \pi Q * 1000$				
Location	MAKER	TYPE	λb	πE	πQ	λP	
RT531	THINK	SCK-103	.065	1.0	1.0	65.00000	
TOTAL						**65.000**	

LITE[redacted]

MANUFACTURING TEST REQUIREMENT

MODEL NAME : PS-5251-2DFS

CUSTOMER : DELL

DATE : FEB, 12 '03

REV. : X2

PREPARED BY : TONY LIU 02/12/03

CHECKED BY :

APPROVED BY :

1. The input AC voltage of the power supply must be in the two ranges. one range is between 90Vac and 135Vac, another range is between 180Vac and 265Vac.

2. For presetting of 12V alignment, adjust +12V output voltage (VR301) within the range of 11.58V to 11.60V, with the following output condition. +5V@5A, +12V/16A, +3.3V/0.1A, -12V/0A, +5Vfp@0A.

3.The output voltage & regulation shall be measured at the pin of the output connector.

4. When the output protection of +5Vfp OCP & SCP are under testing, there must be no glitch on the main 4 outputs.

5.The AC input power should not exceed 1 Watts. When the main power is off (PS-on/off signal is High) and the load current of the +5Vfp is 0.1A and AC input is 120Vac /60Hz、230Vac /60Hz and 25℃ ambient.(230V is for reference only) .

6. The fan speed control circuit depend on customer spec. fan is keep low RPM when output power is 40watt load at 25℃ and 80% load 50℃.

7. The +12V over current protection (OCP)，it must be occur of load (+12V/18.3A)。Please set other condition (+5V@17.7A, +3.3V/14A, -12V/1A, +5Vfp@2A.)，and adjust VR401 let main power shut down。

8. To measure the output Ripple & Noise, the outputs shall be tested per the setup in the figure below.

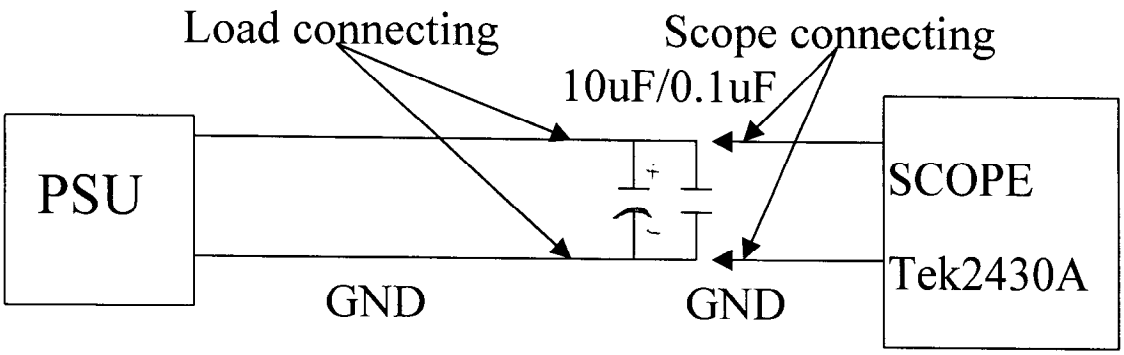

Note :The scope shall be setup as follows.
Mode @ Envelope, Time base @ 10mS.
B.W.@ 20MHz.

9. The others test requirement, Please follow the engineering specification.

10. When the over voltage protection of +5vfp happens, the +5vfp may clamp at certain value or go into "Kick up" mode, the voltage of +5vfp should not exceed 6.9V. There must be no glitch on the main 5 output.

11. The "DC Power Down Warning Time " of the power supply shall be at least 1 ms before the +5v falls below the regulation when P/S was ps-off.

12. The " Power Good Delay Time " of the power supply shall be at least 100 ms, but no greater than 500 ms after the +5v output voltage has reached 90% when P/S was ps-on and AC turn on.

13. The -12V short current protection (SCP) , please set condition (+5V/17.7A, +12V/3.6A,+3.3V/14A, -12V/1A, +5Vfp@2A.).

14. Repetitive ON/OFF cycling of the AC input voltage will not damage the power supply or cause any damage to the power supply or the input fuse to blow. Half cycle peak inrush current, peak repetitive input current, and worst case power factor will be verified and reported by the vendor. The above inrush current values(35A & 70A) are for reference only.

PROPRIETARY NOTE

THIS ITEM IS THE PROPERTY OF DELL COMPUTER CORP. AUSTIN, TEXAS AND CONTAINS CONFIDENTIAL AND TRADE SECRET INFORMATION. THIS ITEM MAY NOT BE TRANSFERRED FROM THE CUSTODY OF DELL COMPUTER CORP. EXCEPT AS AUTHORIZED BY DELL COMPUTER CORP. AND THEN ONLY BY WAY OF LOAN FOR LIMITED PURPOSES. IT MUST NOT BE REPRODUCED IN WHOLE OR IN PART AND MUST BE RETURNED TO DELL COMPUTER CORP. UPON REQUEST AND IN ALL EVENTS UPON COMPLETION OF THE PURPOSE OF THE LOAN. NEITHER THIS ITEM NOR THE INFORMATION IT CONTAINS MAY BE USED BY OR DISCLOSED TO PERSONS NOT HAVING A NEED FOR SUCH USE OR DISCLOSURE CONSISTENT WITH THE PURPOSE OF THE LOAN WITHOUT PRIOR WRITTEN CONSENT OF DELL COMPUTER CORPORATION.

REVISIONS

HIGHEST IDENTIFIER NO. USED

DIMENSION IDENTIFIER NO. NOT USED

REV	ECO	DESCRIPTION	DATE	APRVD
A00	125730	CREATED DRAWING. RELEASED FOR PRODUCTION. GV 02/03/03	----	----

A CURRENT ISSUE OF THIS DRAWING MUST INCLUDE A COPY OF THE FOLLOWING ECO'S:

ECO_____ DATE__/__/__

ECO_____ DATE__/__/__

ECO_____ DATE__/__/__

ECO_____ DATE__/__/__

ECO_____ DATE__/__/__

UNLESS OTHERWISE SPECIFIED ALL DIMENSIONS ARE IN INCHES [MILLIMETERS].

TOLERANCES

.XX [X.X] = ±.02 [0.5]
.XX [X.XX] = ±.02 [0.5]
.XXX [X.XXX] = ±.010 [0.25]
ANGULAR ∠ = ±0° 30′

HOLE DIAMETER

0 [0] THRU .250 [6.36]	.251 [6.37] THRU .500 [12.71]	.501 [12.72] AND UP
+.003 [0.08] -.002 [0.05]	+.005 [0.13] -.003 [0.08]	+.010 [0.25] -.005 [0.13]

THREADS: EXT 2A, INT 2B

		DATE
DRAWN	G. VILLANUEVA	2/3/03
CHECKED	G. VILLANUEVA	2/5/03
ENGINEER	D. PAV	2/5/03
APPROVAL	D. BRODER	2/5/03
APPROVAL	K. ASANTE	2/5/03
APPROVAL	J. ELLIOTT	2/5/03
APPROVAL	B. BAIN	2/5/03
	J. GROLEAU	2/5/03

DELL COMPUTER CORPORATION
AUSTIN, TEXAS

TITLE:

SPEC, PWR SPLY, 250W, SATA, MECH

SIZE	DWG NO.	REV.
A	W0454	A00

SCALE: | SHEET 1 OF 6

(MECH P/S DB: W0454_SPEC)

NOTES: (UNLESS OTHERWISE SPECIFIED)

1. INTERPRET DIMENSIONS PER ANSI Y14.5M-1982.

2. ALL DIMENSIONS, UNLESS OTHERWISE NOTED, ARE CRITICAL DIMENSIONS AND SHALL BE CHECKED FOR CONFORMITY DURING FIRST ARTICLE INSPECTION.
   XX STATISTICAL PROCESS CONTROL: THESE DIMENSIONS SHALL BE STATISTICALLY MONITORED BY SUPPLIER.
   XX SUPPLIER QUALITY: THESE DIMENSIONS SHALL BE MONITORED AS SPECIFIED IN THE SUPPLIER QUALITY PLAN.

3. TOLERANCES:
   A. 2 PLACE DECIMALS .XX [X.X] = ±.02 [0.5]
   B. 3 PLACE DECIMALS .XXX [X.XX] = ±.010 [0.25]

4. MATERIAL THICKNESS:
   A. BASE: .029 +.006/-.000 [0.73 +0.14/-0.00]
   B. COVER: .022-.034 [0.56-0.86]

5. IN ACCORDANCE WITH THE U.S. CLEAN AIR ACT OF 1990, THE MANUFACTURING FABRICATION PROCESS FOR THIS PART MUST NOT INCLUDE THE USE OF OR CONTACT WITH ANY E.P.A. LISTED CLASS I OZONE DEPLETING CHEMICALS (ODC'S).

6. PART SHALL CONFORM TO DELL CORPORATION COSMETIC SPECIFICATION (P/N 6724U). ALL SURFACES SHALL BE CLASS 4.

7. ALL EDGES SHALL BE CONDITIONED FOR HANDLING WITH INDUSTRY STANDARD BURR NO GREATER THAN 10% OF MATERIAL THICKNESS AND SHALL CONFORM TO UL SAFETY SPEC 1439.

8. LABELS SHALL BE PLACED AND ORIENTED AS INDICATED.

9. TIE WRAPS SHALL BE FLUSH-CUT TO BE FREE FROM SHARP EDGES.

10. TAPPED HOLES SHALL WITHSTAND A TIGHTENING TORQUE OF 15IN-LB.

11. DC CABLE SHALL EXIT POWER SUPPLY WITHIN INDICATED AREA.

12. NO HARDWARE, SCREWS, GROMMETS, SHEETMETAL, ETC., SHALL PROTRUDE OUTSIDE THE OUTER DIMENSIONS OF THE POWER SUPPLY, UNLESS APPROVED BY DELL ENGINEERING.

13. ALL WIRES EXITING POWER SUPPLY, EXCEPT P2, ARE TO BE WIRE TIED TO POWER SUPPLY VENTING AS SHOWN IN FIGURE 3.

14. INDICATED ZONES DEFINE MAXIMUM ALLOWABLE VENTILATION AREA. VENTILATION PATTERN IS VENDOR'S OPTION AND MUST BE APPROVED BY DELL ENGINEERING.

15. INDICATED ZONE DEFINES MAXIMUM ALLOWABLE AREA FOR AC SOCKET AND VOLTAGE SWITCH.

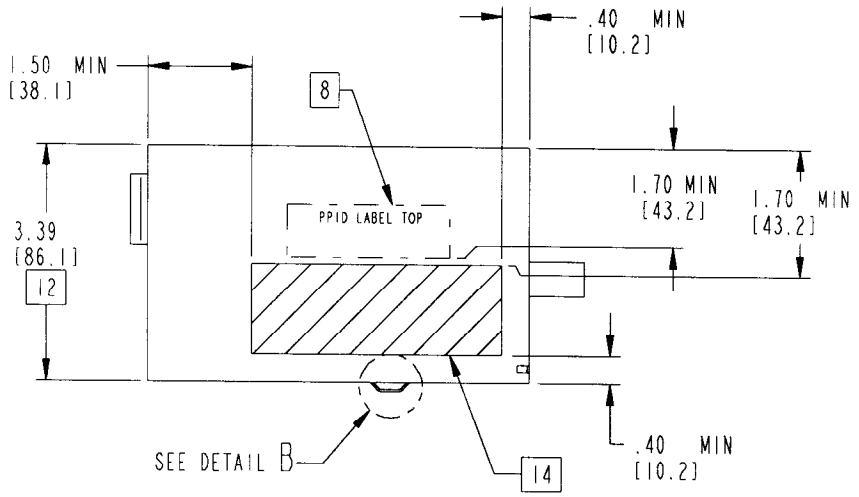

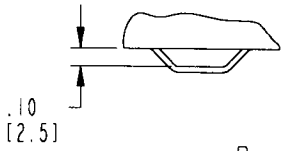

DETAIL B
SCALE: 1/1

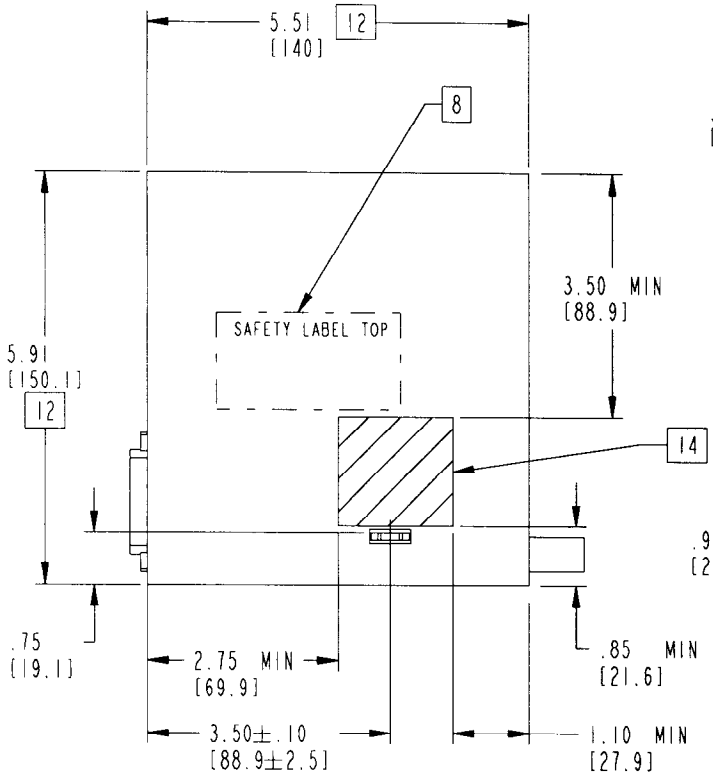

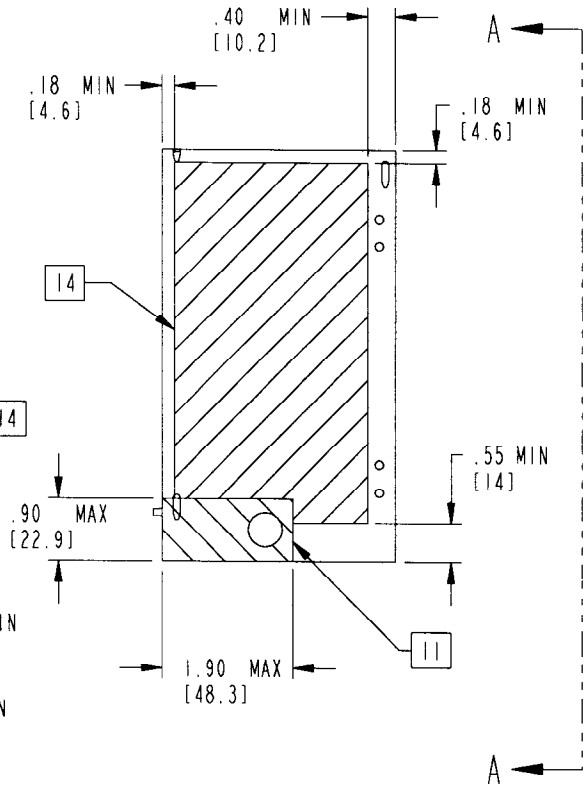

DELL COMPUTER CORPORATION AUSTIN, TEXAS	SIZE A	DWG NO. W0454	REV. A00
	SCALE:		SHEET 3 OF 6

(MECH P/S DB: W0454_SPEC)

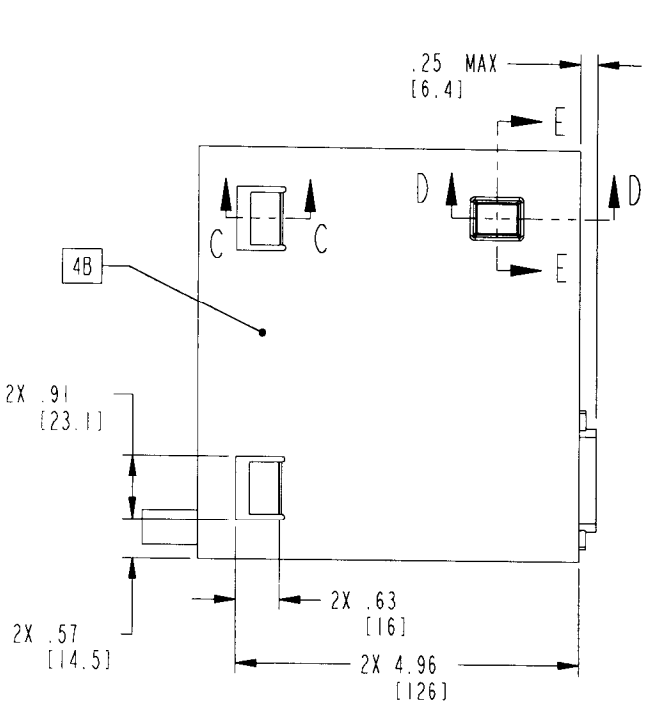

VIEW A-A

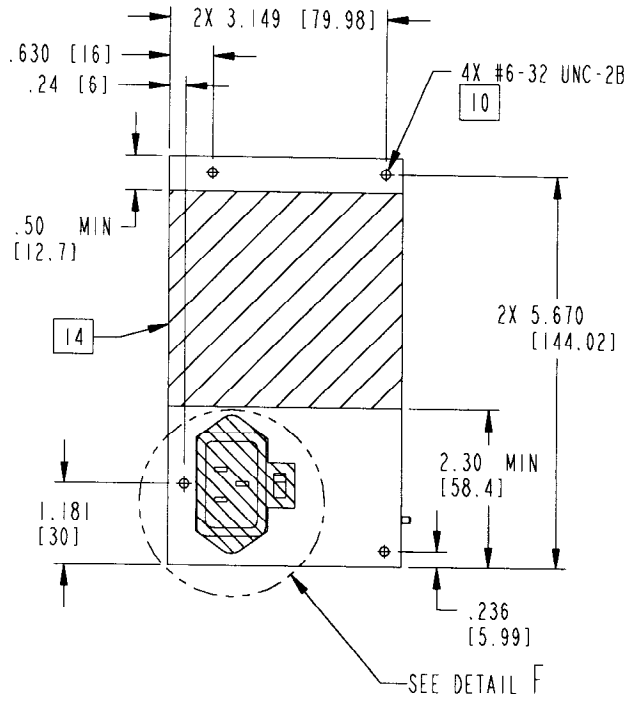

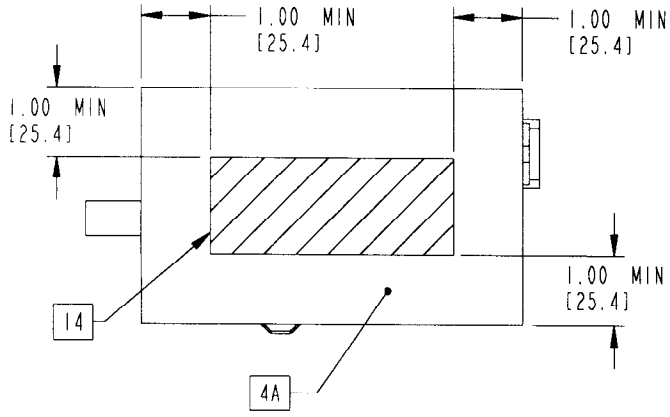

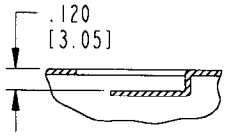

SECTION C-C
SCALE: 1/1
2X

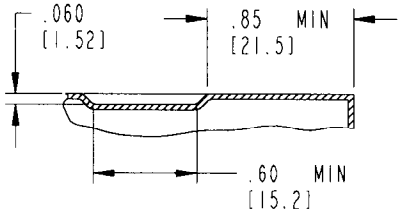

SECTION D-D
SCALE: 1/1

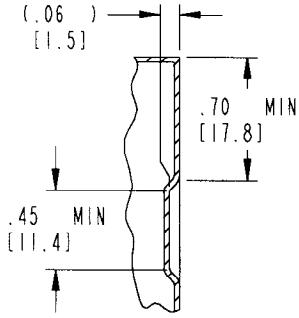

SECTION E-E
SCALE: 1/1

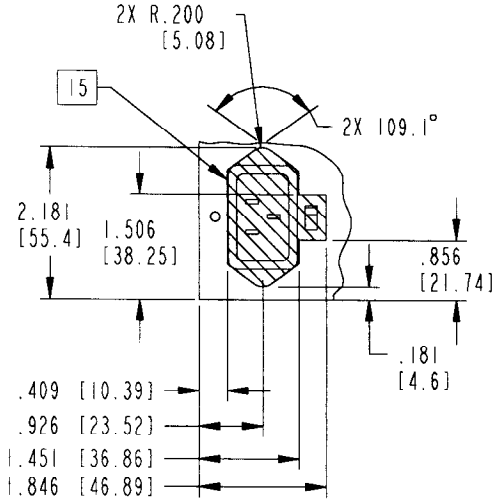

DETAIL F
SCALE: 2/5

DELL COMPUTER CORPORATION AUSTIN, TEXAS	SIZE A	DWG NO. W0454	REV. A00
	SCALE:		SHEET 4 OF 6

(MECH P/S DB: W0454.SPEC)

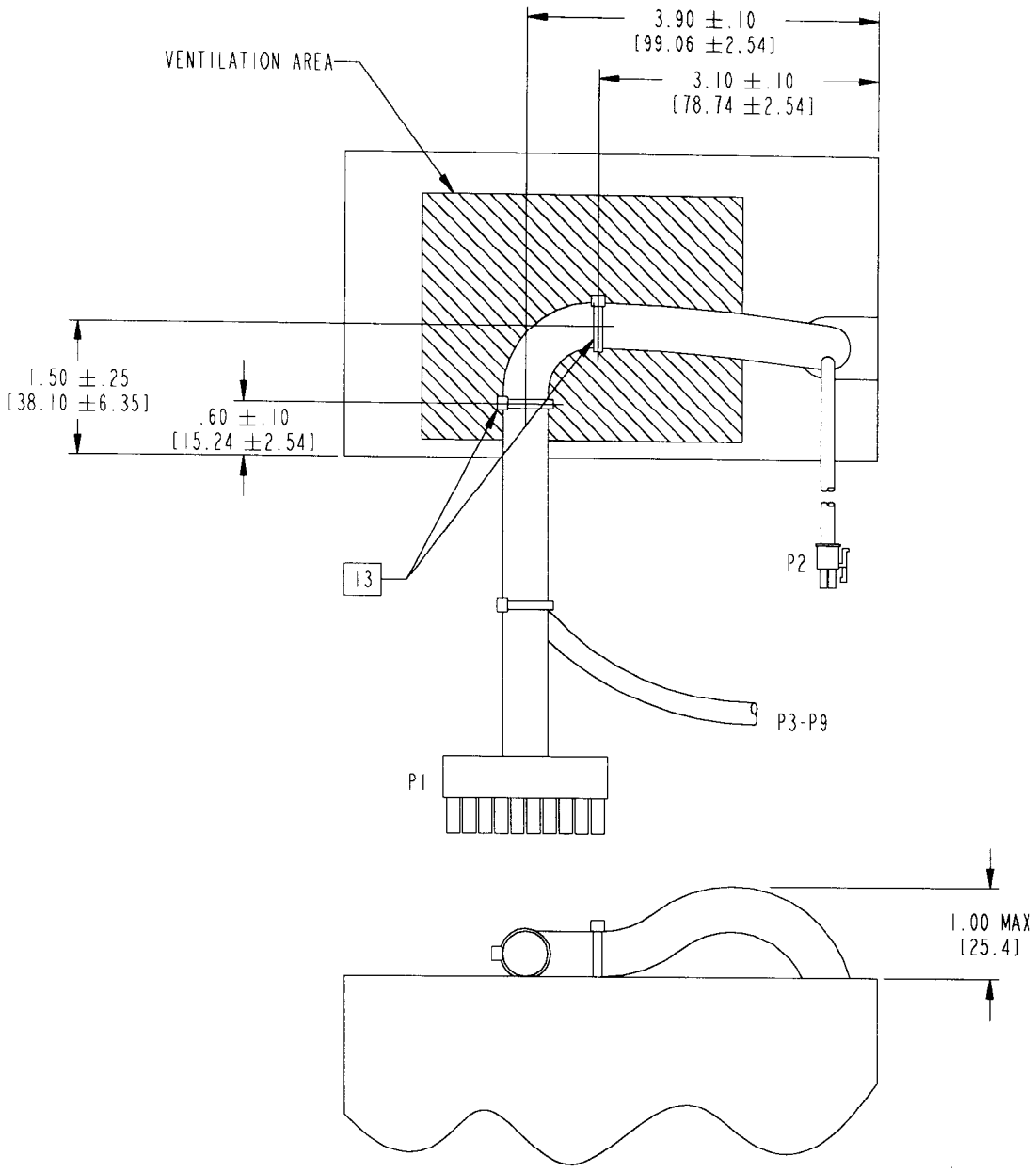

DELL

DELL COMPUTER CORPORATION
AUSTIN, TEXAS

SIZE	DWG NO.	REV.
A	W0454	A00
SCALE:		SHEET 5 OF 6

(MECH P/S DB: W0454_SPEC)

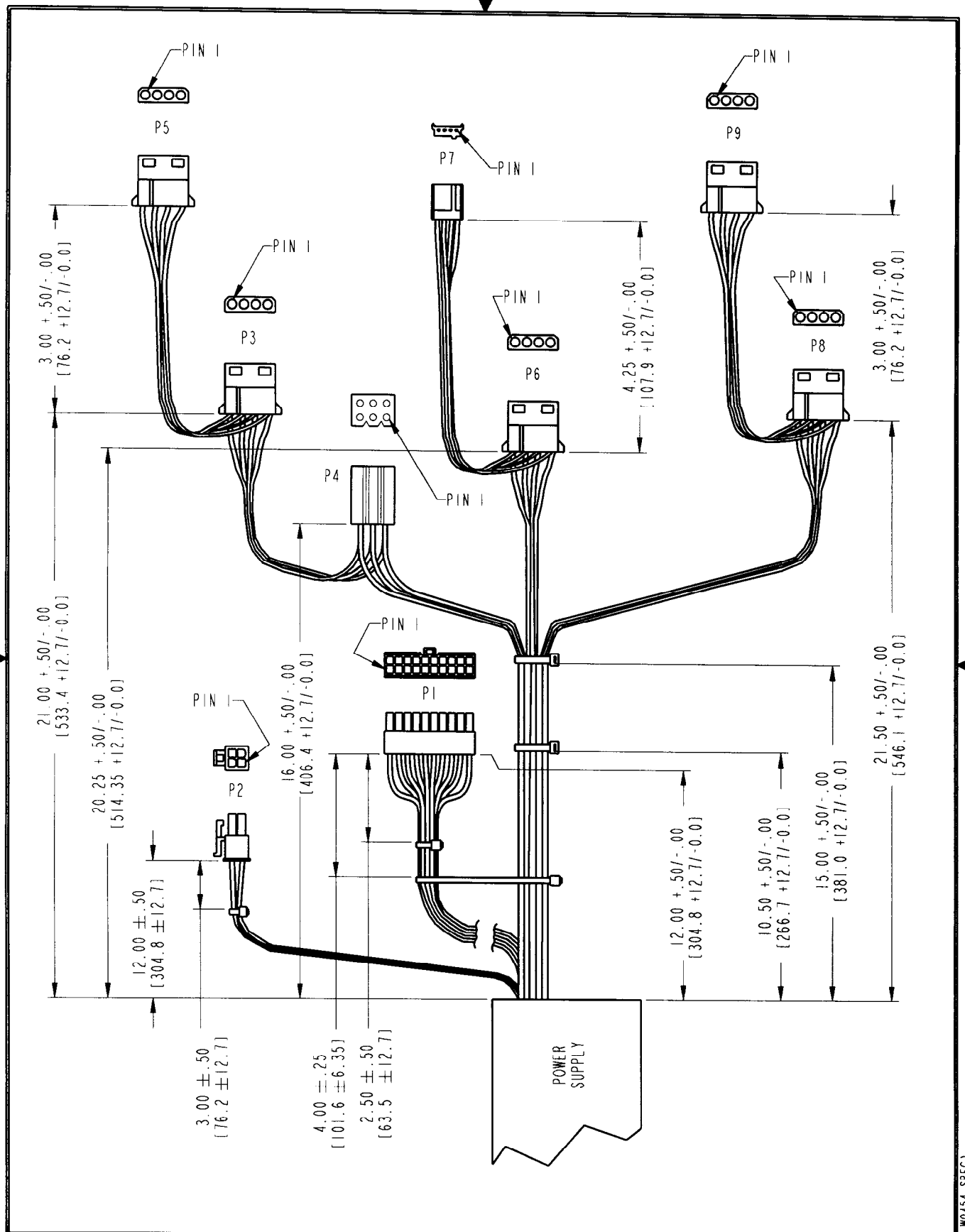

DELL COMPUTER CORPORATION
AUSTIN, TEXAS

SIZE	DWG NO.	REV.
A	W0454	A00
SCALE:		SHEET 6 OF 6

(MECH P/S DB: W0454_SPEC)

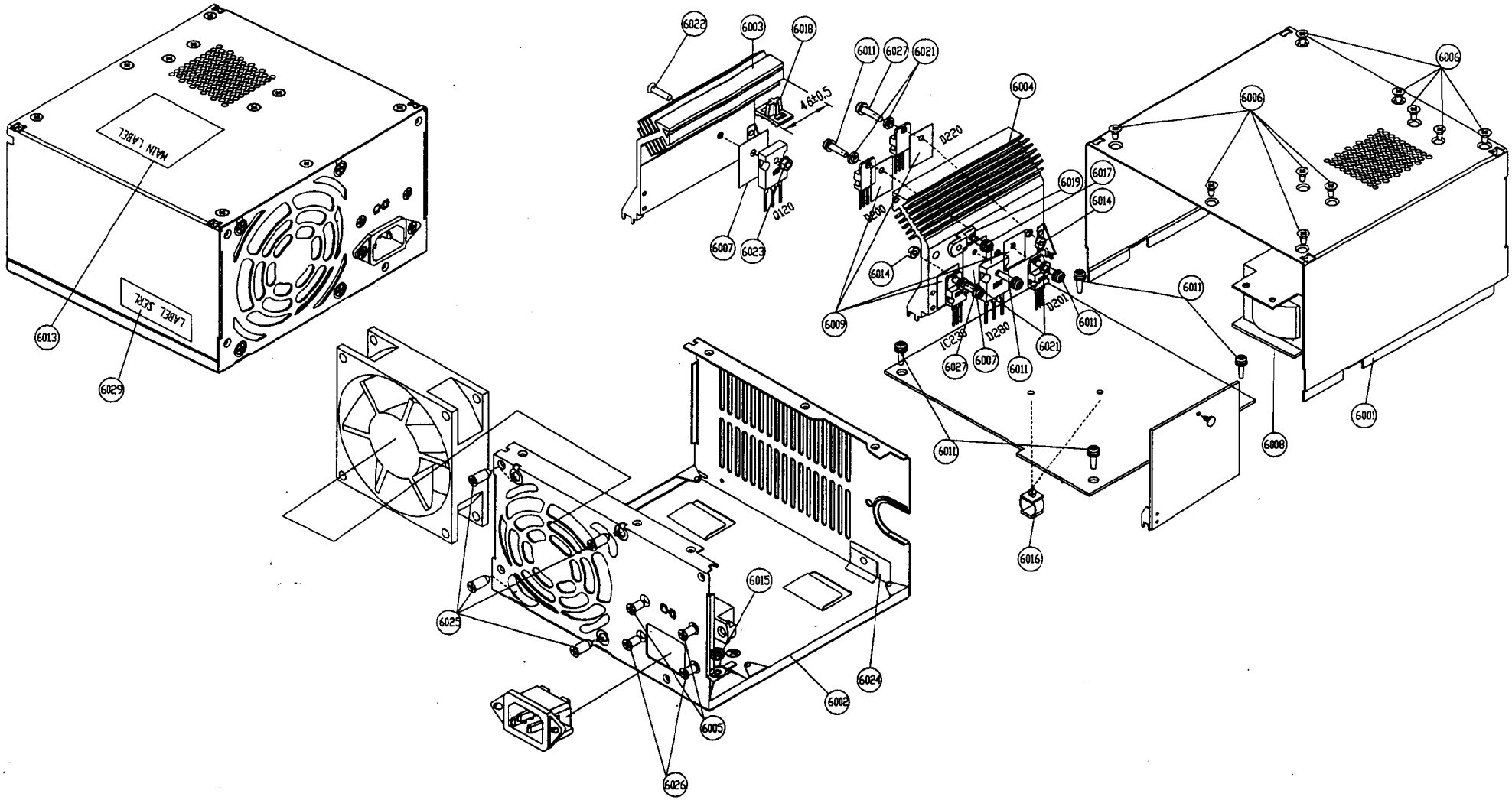

				PRINTING DATE	12-FEB-03		2D FILE	ASSEMBLY_PS-5251-2DFS	DESIGNER	AerosonChen			TITLE: ASSEMBLY DRAW.	PART NO.: ———	
⚠	RELEASED	12-FEB-03		FINAL DATE	12-FEB-03		3D FILE	———	CHECKER	J.A.LIN	APPROVED		PROJECT: PS-5251-2DFS	DRAWING NO.: 3ASS00640	REV.: A
REVISION	DESCRIPTION	DATE	ZONE	UNIT: mm	SCALE: ———							LITEON LITE-ON ELECTRONICS, INC.			

PS-5251-2DFS SPECIAL ASSEMBLING INSTRUCTION

REV:05

一. 安規要求：	料號	Status
1-1 Fan線材(由Fan起)加套套管	參P/L	

二. 設計性要求：	料號	Status
3-1 Fan Wire 請加工至 100 mm (+/- 5mm). (包含 裸線 5mm)	參P/L	
3-2 L,N線互絞4個交叉點並用束線與FG線綁固,附圖一	參P/L	
3-3 SW線互絞8交叉點並用束線綁固於風扇孔上,附圖	參P/L	
3-4 Inlet L線朝N方向45度勾焊,避免組裝時頂到L100,X-Cap以白膠點固於Inlet下方各戶預留孔與風扇之間	126036	
3-5 熱敏鎖附位置及走線,附圖一		
3-6 L281,C282,L101,C121,C120,L280,S1,S2,C400(s2),RV124與基板間點膠固定	100288	
3-7 C104,C103,C108,C222與基板間點膠固定(本體不可超出板邊)	100288	
3-8 L281&C281&L200本體上方之間點膠固定	100288	
3-9 L280本體與H/S之間點膠固定	131334	
3-10 R123,RV120,RV121,RV123,RV124,C122,R124,R510加套套管	參P/L	
3-11 H/S間支柱須點綠膠,附圖三	116794	
3-13 Q120,D280螺帽須點綠膠	116794	
3-14 PCB鎖附螺絲須依ME要求順序 ,附圖四		
3-15 PFC線材1&2(粗),3&4(細)須絞線6個交叉點,用束線綁於H/S預留孔(避免卡到扇葉)		
插入pcb 紅-->L102-1 白-->L102-2 藍-->L102-3 黑-->L102-4		
3-16 C503,C510與PCB之間點膠固定(不可touch H/S)	100288	
3-17 C400(s2)須成型爲臥式插見後與基板間點膠固定	100288	
3-18 下蓋於輸出線材孔下方加貼絕緣片(避免螺絲與L210零件腳 touch)附圖六		
3-19 PFC線材出線端需朝風扇方向		
3-20 風扇線材插焊於基板後須點膠與基板固定(因製程膠會覆蓋Q531有散熱問題需用RTV膠)	131334	
3-21 L100需依規定插件於基板,附圖七		
3-22 C108近螺絲頭之腳&Q120第一腳加鐵心(Bead Dore)	107756	A

三. 其他要求 :(對策HLAT 不良)	料號	Status
4-1 L200,T120(不可點在R220,R201上方有散熱問題),**C310(sb),H/S1&H/S2 pin**與基板間點膠固定	100288	
4-2 H/S1 pin pad&H/S2 pin pad*需固定補焊加錫*		
4-3 L100 pad*需固定補焊加錫*		
4-4 C510,C223,C307(sb),D220 PIN與基板間點膠固定	100288	
4-5 L100,T501底座二邊與基板間點膠固定	100288	
4-6 PFC下方加貼絕緣片,以中心點對齊每邊約凸出**5mm**並加點(小點)膠約於中心位置固定	131334	

廠內一般性作業準則：	料號
A a.晶體+雲母片&散熱片加工:晶體與雲母片間,雲母片與散熱片間均須塗散熱膏	101506
b.晶體+矽膠片&散熱片加工:不須塗散熱膏	
c.晶體&散熱片加工:晶體與散熱片間須塗散熱膏	101506
B 線材未加HOOK插焊於基板後須點膠與基板固定	100288
C VR測試後須點膠	

Status:A=Add C=Change D=Delete

Date: 02 / 26 / 03

Prepared by: 張安邦 張安邦

E/E: 劉加義 M/E:

Approved by: Joe Shen 2/13/02

PS-5251-2DFS SPECIAL ASSEMBLING INSTRUCTION

附圖一

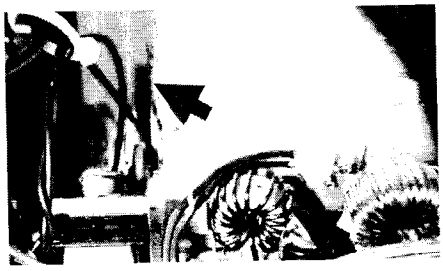

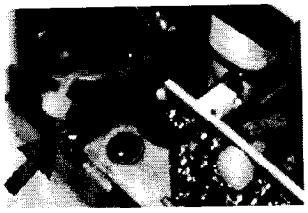

地線作業位置

附圖三

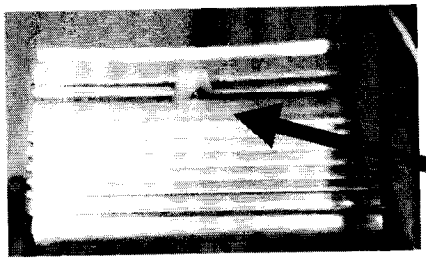

點膠需確實使support牢固

附圖四

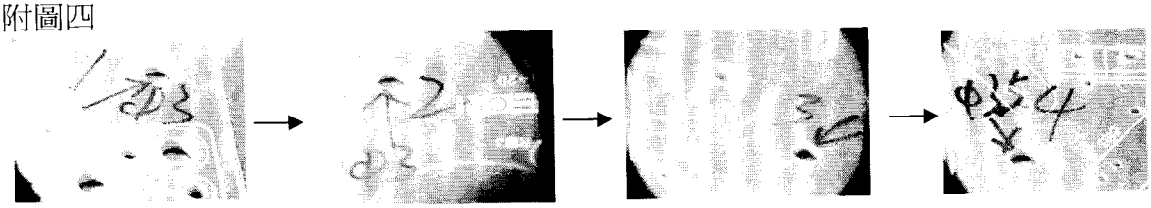

附圖六

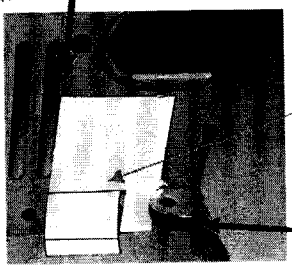

*需先折線成型再撕離型紙
a.以通風口的邊線爲y軸基線
b.下蓋折彎處爲x軸基線

附圖七

上緣切齊邊朝F100(與基板標示相反)

PS-5251-2DFS Pilot Run Report (工廠報告)

TO : (R/D)劉仁義 陳志華 張安馳(QC) 胡光榮 王濤(AI)李君權 (SAFE)李佳倫 (MFG)丁華 黃定華 (PC)王小云 曾衛

File NO.: SBU1-Pilot-030303

CC : (MFG)David Chen,(QC)HC Cheng ,(ENG1)Robert Wen (SALES)Magic Chiang,(R/D)FH Huang,Alex Yih, (P&MM)Anson Chiu

Issue Date: 3/7/03.

From : SBU1 IE楊鳳寧

Lot Information :

Input Date : 2/17/2003

Line : L2-2

Lot Qty : 200 PCS

Product Rev :

P/L Rev : 0G

Customer : DELL

Over All Test Loss (OATL) :

Station	Initial	Vibration	Harmonic-1	Hi-pot-1	Protection-1	ATE-1	Burn In
Input Qty	100	100	100	100	100	100	100
Reject Qt	0	0	0	0	0	0	0
Yied (%)	100.0%	100.0%	100.0%	100.0%	100.0%	100.0%	100.0%

Station	Harmonic-2	Hi-pot-2	Protection-2	ATE-2	Power Test	OATY(%)
Input Qty	100	100	100	100	100	
Reject Qty	0	0	0	0	0	
Yied (%)	100.0%	100.0%	100.0%	100.0%	100.0%	100.0%
OATL :	0	(DPPM)				

Remarks : OATY = Multiplication of all test station yield (%)

OATL = $(1-OATY)*10^6$ (DPPM).

Attachments as below :

(1). FA & CA	(- Pages)	(7). ORT Results	(- Pages)
(2). Solder Quality Analysis Report	(7 Pages)	(8). Ultrasonic Report	(- Pages)
(3).FMEA Report	(- Pages)	(9). Uninput 2nd Source List	(- Pages)
(4). Issue track list	(2 Pages)	(10). PMP & Flow Chart	(11 Pages)
(5). Electrical CPK	(10 Pages)	(11).Test Plan	(- Page)
(6). Cable CPK	(1 Pages)		

Open Issues :

No	Section	Item No
(a)	FA&CA	N/A
(b)	Solderability	Refer to the solder report
(c)	FMEA	N/A
(d)	Elec.CPK	OK
(e)	Cable CPK	CPK FAIL: P4=0.315,P8=0.477.
(f)	ORT	N/A
(g)	Ultrasonic	N/A

Conclusion :

可进入量产.

Prepared : 3/26'03 Checked : 3/1'03 Approved : 3/6'03

LITEON

SOLDERING QUALITY ANALYSIS REPORT

TO: 劉仁義;楊風宁

FROM:王洪林

STAGE: Pilot Run

DATE:2003/2/17

PARAMETER	LINE	L2-2	DENSITY	0.842	TOTAL DOT [bit]	11740
	MODEL	PS-5251-2DFS	REAL.DENSITY	0.841	SOLDER TIME [sec.]	2.8
	PREHEAT [°C]	450	SOLDER'S TEMP. [°C]	245	TOTAL DOT/PCB [bit]	587
	REAL TEMP. [°C]	104	REAL TEMP. [°C]	244	SPOT CHECK [pcs]	20
	FOAMING WIDTH(mm)	46	SPEED [m/min]	1.40	PCB DIRECTION	請參見附圖:6-4

skipped Solde	LOCATION																				
	Q'TY																				
	DPPM																				
Bridge	LOCATION																				
	Q'TY																				
	DPPM																				
Lead Invisible	LOCATION	L201 包焊	R122 包焊	R201 包焊																	
	Q'TY	13	2	3																	
	DPPM	1107	170	256																	
TOTAL	DEFECT DOT	18																			
	DPPM	1533																			

PREPARED BY: 王洪林 2/22'03

CHECKED BY: 余艳红 2/25'03

APPROVED BY: 楊風宁 2/26'03

EI-13-F06

LITEON SOLDERING QUALITY ANALYSIS/TRACING REPORT

MODEL : PS-5251-2DFS

STAGE: Pilot Run

DATE: 2003/2/17

階段 Stage	項目 Item	不良類別 Classify	不良位置 Location	不良率 DPPM	原因分析 Root Cause	建議改善對策 Proposal	責任者 In Charge	責任單位回覆 Response	完成期限 Due Date	執行狀態 Status
Pilot Run	1	包焊	L201,L282	1107	元件腳露出PCB板過短(0.83mm),插件不能到位而平腳,經分析此屬于來料不良	要求厂商嚴格按設計規范交貨	IE 楊風宁	同意按要求改善	下階段	
	2	包焊	R122	170	作業不良:插件動作不到位而平腳	請IE在MOI中注明此注意事項,并指導作業人員作業	IE 楊風宁	同意按要求改善	下階段	
	3	包焊	R201	256	作業不良:插件動作不到位而平腳	請IE在MOI中注明此注意事項,并指導作業人員作業	IE 楊風宁	同意按要求改善	下階段	

PREPARED BY: 劉林 2/22/03

CHECKED BY: 余艳 2/25/03

APPROVED BY: 陆松 2/26/03

EI-13-F06

LITEON

SOLDERING QUALITY ANALYSIS/TRACING REPORT

STAGE: DVT

DATE:2003/1/24

MODEL : PS-5251-2DS/2DFS

階段 Stage	項目 Item	不良類別 Classify	不良位置 Location	不良率 DPPM	原因分析 Root Cause	建議改善對策 Proposal	責任者 In Charge	責任單位回覆 Response	完成期限 Due Date	執行狀態 Status
DVT	1	空焊	C122	681	此元件腳徑爲0.6MM,孔徑爲1.2MM.孔徑太大易造成空焊.	建議RD把此孔改爲0.6MM*1.5=0.9MM	RD/劉仁義	ISSUE TRACING LIST:2	Next stage	close
	2	短路.	R223	852	作業員插入此元件時,需要再壓低此元件,致使元件腳向內彎曲靠在一起易造成短路.	建議IE加工此元件一次成形後再投入生產.	IE/楊風宁	同意改善	Next stage	close

PREPARED BY: 黃加銘 1/26 '03

CHECKED BY: 余艳紅 1/29 '03

APPROVED BY: 2/1 '03

EI-13-F06

LITEON

SOLDERING QUALITY ANALYSIS/TRACING REPORT

STAGE: EVT2

DATE:2003/1/7

MODEL：PS-5251-2DS/2DFS

階段 Stage	項目 Item	不良類別 Classify	不良位置 Location	不良率 DPPM	原因分析 Root Cause	建議改善對策 Proposal	責任者 In Charge	責任單位回覆 Response	完成期限 Due Date	執行狀態 Status
EVT2	1	短路	R223	511	此元件爲立式插件.元件腳端點与另一腳打彎腳處未在同一水平面,如page6-6附圖1所示,插件后元件腳會彎向+12v.且元件腳長達5.6mm從而造成R223与+12V短路,如page6-6附圖2所示	1:請PT變更相關長度.使元件兩腳定位點相對于PCB板在同一水平面 2:請將元件腳長控制在2.5mm之內,以避免元件腳過長過錫爐時挂到錫槽而影響焊錫品質	RD 劉仁義	ISSUES TACKING LIST:1	下阶段	close
	2	平腳	L200	256	此元件在壓扶件工位時作業人員未按要求將元件壓扶到位而致	請IE在MOI中強調此注意事項并指導作業人員作業	IE 楊鳳宁 楊鳳宁	同意按要求執行.	下阶段	ok
	3	平腳	C103	170	此元件在插件工位時作業人員未按要求將元件插到位而致	請IE在MOI中強調此注意事項并指導作業人員作業	IE 楊鳳宁 楊鳳宁	同意按要求執行	下阶段	ok
	4	平腳	C104	256	此元件在插件工位時作業人員未按要求將元件插到位而致	請IE在MOI中強調此注意事項并指導作業人員作業	IE 楊鳳宁 楊鳳宁	同意按要求執行	下阶段	ok

PREPARED BY: 王洪林 2/15'03

CHECKED BY: 余韋名 2/15'03

APPROVED BY: 沈耀曙 2/15'03

LITEON

SOLDERING QUALITY. ANALYSIS/TRACING REPORT

STAGE: EVT

DATE:2002/10/31

MODEL : PS-5251-2DS/2DFS

階段 Stage	項目 Item	不良類別 Classify	不良位置 Location	不良率 DPPM	原因分析 Root Cause	建議改善對策 Proposal	責任者 In Charge	責任單位回覆 Response	完成期限 Due Date	執行狀態 Status
EVT	1	短路	CN2	426	1:PCB板Pad間間距太小(0.44mm)	1:建議將Pad加防焊白漆,且白漆厚度需高于Pad厚度	RD 劉仁義	FMEA:20	下阶段	close
	2	短路	D200	321	1:PCB板Pad間間距太小(0.42mm)	1:建議將Pad加防焊白漆,且白漆厚度需高于Pad厚度	RD 劉仁義	FMEA:21	下阶段	close
	3	短路	D220	426	1:PCB板Pad間間距太小(0.42mm)	1:建議將Pad加防焊白漆,且白漆厚度需高于Pad厚度	RD 劉仁義	FMEA:22	下阶段	close
	4	空焊	C124	596	1:PCB板孔徑爲1.22mm,元件脚徑爲0.5mm,孔徑与脚徑配合不當而平脚	1:建議將PCB板孔徑改爲0.8mm	RD 劉仁義	FMEA:23	下阶段	close

PREPARED BY: 王洪林 2/15'03

CHECKED BY: 余韋名 2/15'03

APPROVED BY: 林名昌 2/15'03

EI-13-F06

LITEON

SOLDERING QUALITY ANALYSIS REPOR

MODEL:PS-5251-2DFS

STAGE: Pilot Run DATE: 2003/2/17

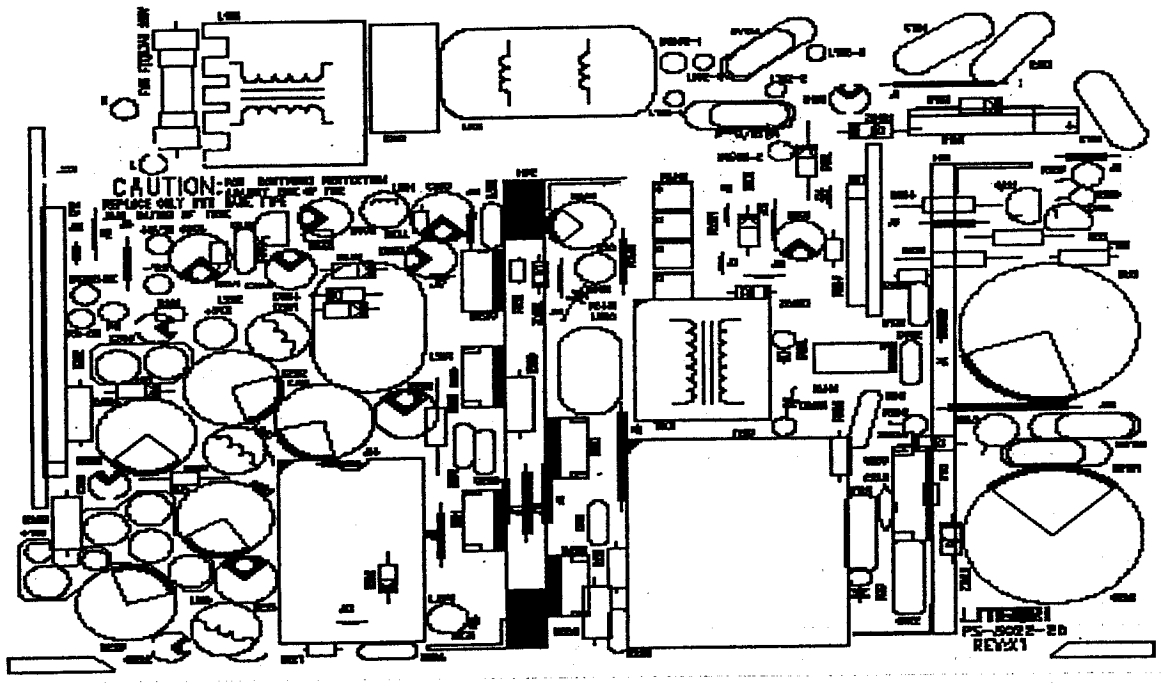

soldering direction (PCB copper side)

PREPARED BY: 2/22'03 CHECKED BY: 2/25'03 APPROVED BY: 2/26'03

EI-13-F06

LITEON

SOLDERING QUALITY ANALYSIS REPORT

MODEL: PS-5251-2DFS

STAGE: Pilot Run

DATE: 2003/2/17

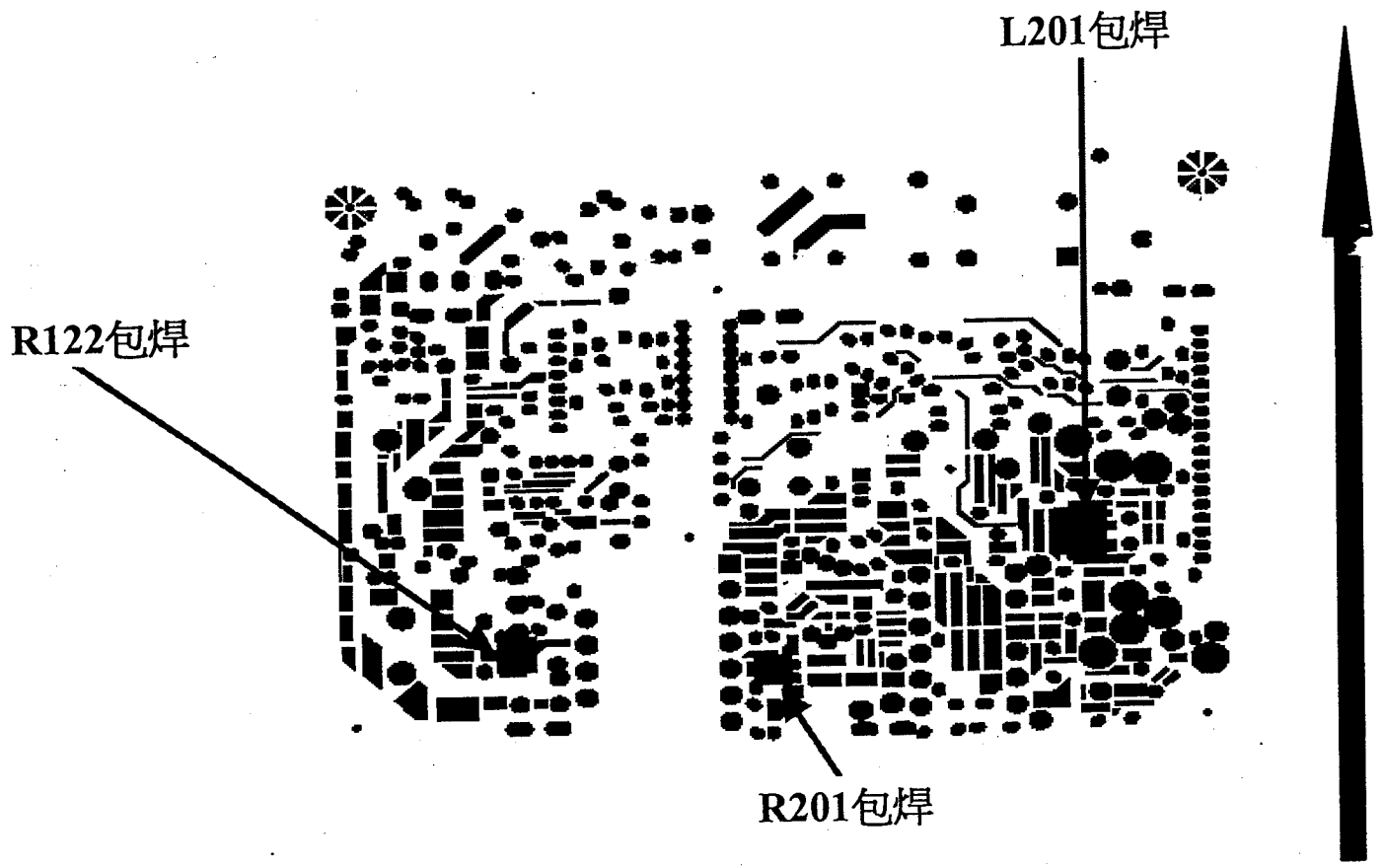

soldering direction (PCB copper side)

PREPARED BY: 2/22'03

CHECKED BY: 2/25'03

APPROVED BY: 2/26'03

EI-13-F06

不良位置局部放大示圖

MODEL: PS-5251-2D

STAGE:Pilot Run

DATE: 2003/2/17

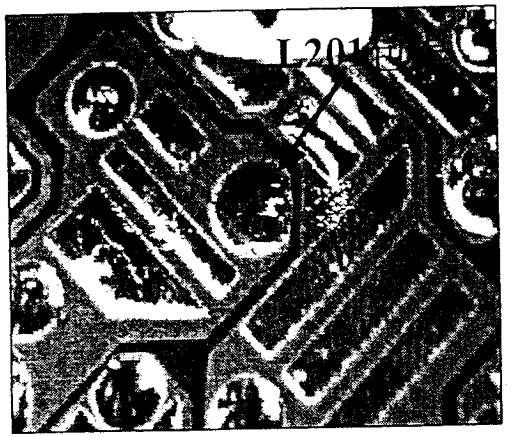

附圖1

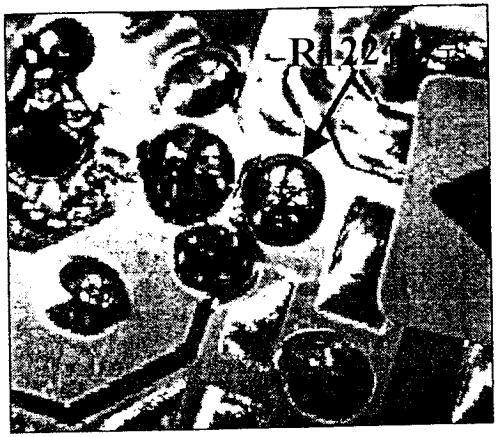

附圖2

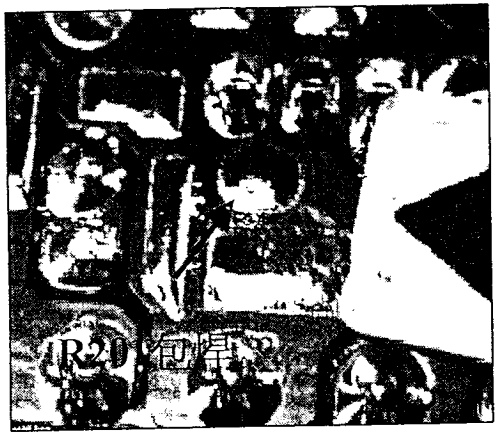

附圖3

PREPARED BY: 2/22'03

CHECKED BY: 2/25'03

APPROVED BY: 2/26'03

EI-13-F06

PS-5251-2DS/2DFS ISSUES TRACKING LIST

Customer:DELL **Stage: PILOT RUN** **Input q'ty:300PCS** **HI:17/02/03**

Team member

IE:楊鳳寧 PE:楊平 RM:龔加銘 TE:陳昌付 AI:李聯忠 MFG:黃定華 SQM:熊宏 PC:曾衛

IPQC:李貽軍 OQC:王永祥 SAFETY:陳亞菲 MQE:王志民 MC:朱家運 P/T:劉仁義,陳志華

NO.	工程名稱	問題點	對策	對策實施狀況	PIC&Date	設計	對策實施狀況 (工廠確認)	改善后狀況 責任人確認	是否違反設計規範
1	AI(MB)	R125,R500本体長爲7.5MM,跨距太小(10MM)	請將元件跨距改爲12.5MM或選用二級編帶材料	安規考量無法修改		cad			
2	PCB(S2) Layulout	R251本体長爲6.8MM,Pitch爲10MM	請修改Pitch爲12MM或改爲二級編帶	標準 1/4w pitch 10mm		cad			
3	PCB(S1.S2)	S1 D302與IC300易短路 S2 C330與C331易短路,C416 80%空焊	請修改間距	移動c331,r333,r335 間距加大至0.25mm,c416爲標準元件,d302&ic302無法移動		cad			
4	PE	INITIAL +12V電壓調不到位（要求11.6v--11.62v）， 實際爲: 11.55-11.58v	將可調電阻VR301從10k變更到20k	將VR301變更200k		EE Tony RJ			
5	PE	1W功率在230V/60HZ時偏大	請R/D修改 SPEC	update spec		EE Tony RJ ME Aeroson			
6	PE	2DFS 在115V 時 INRUSH電流爲41~48A,SPEC :35A 測試中很難PASS	請R/D修改 SPEC	update spec		EE Tony RJ ME Aeroson			
7	PK	P4 PIN線材中黃色，黑色線材較長（黃色長出20mm，黑色長出10mm），綁束線后理不直，影響外觀	請R/D修改線材SPEC	update spec		EE Tony RJ ME Aeroson			
8	PK	機殼上蓋貼PPIB標簽位置有變更，但其刻痕沒變，易誤導作業. 貼CAUTION LABEL無刻痕.	在CASE-TOP 上更新標簽刻痕.	共用上蓋請使用治具作業		ME Aeroson			
9	SAFATY	"CAUTION"系列文字點膠時被膠覆蓋	移"CAUTION"系列文字于F100端	ok		cad			

NO.	工程名稱	問題點	對策	對策實施狀況	PIC&Date	設計	對策實施狀況 (工廠確認)	改善后狀況 責任人確認	是否違反設計規範
10	SAI	2DS 2DFS 要求L&N互絞4個交叉點，SW線互絞8個交叉點，但絞線機有+/-2個交叉點的誤差，無法做到每台機都爲固定的4和8個絞叉點	修改SAI,給交叉點數一定的泛圍	爲共通問題將與工廠討論後再決定		Teresa			

Revised by: 3/8'03

Checked by: 3/1'03

Approved by: 3/6'03

PS-5251-2DFS PILOT RUN Cpk

DESCRIPTION :

A. The requirement of Cpk value is over 1.5 .

B. All the test value meet the SPEC.

Please see the data for details

Prepared By: Checked By: Approved by:

PS-5251-2DFS PILOT RUN

Test#	1.TURN ON (T1)					2.HOLD UP (AC OFF)			3.TURN ON(T2)					4.HOLD UP(T4)				5.TURN ON(T3)					6.HOLD UP (T6)					7.HOLD UP(T5)			
	Vin:90V Fin:47Hz Io:+5V/5A +12V/16A +5Vs/2A -12V/0.5A +3.3V/6A					Vin:115V Fin:47Hz Io:+5V/5A +12V/16A +5Vs/2A			Vin:90V Fin:47Hz Io:+5V/5A +12V/16A +5Vs/2A -12V/0.5A +3.3V/6A					Vin:90V Fin:47Hz Io:+5V/5A +12V/16A +5Vs/2A -12V/0.5A +3.3V/6A				Vin:90V Fin:47Hz Io:+5V/5A +12V/16A +5Vs/2A -12V/0.5A +3.3V/6A					Vin:115V Fin60Hz Io:+5V/5A +12V/16A +5Vs/2A -12V/0.5A +3.3V/6A					Vin:90V Fin47Hz Io:+5V/5A +12V/16A +5Vs/2A -12V/0.5A +3.3V/6A			
Unit No	T1(+5V)	T1(+12V)	T1(-12V)	T1(+3.3V)	Inrush	(+5V)	(+12V)	(+3.3V)	T2(+5V)	T2(+12V)	T2(+5Vs)	T2(-12V)	T3(+3.3V)	T4(+5V)	T4(+12)	T4(-12V)	T4(+3.3V)	T3(+5V)	T3(+12)	T3(+5Vs)	T3(-12V)	T3(+3.3V)	T6(+5V)	T6(+12)	T6(+5Vs)	T6(-12V)	T6(+3.3V)	T5(+5V)	T5(+12V)	T5(-12V)	T5(+3.3V)
1	66.65	66.701	67.46	66.744	28.13	32.38	31.28	37.68	8.24	11.467	6.688	4.025	4.857	4.878	3.793	8.512	10.146	188.964	185.736	263.813	192.208	192.087	27.24	27.24	27.241	27.24	27.241	48.144	48.862	42.92	46.333
2	63.44	63.487	64.295	63.618	28.25	32.03	30.96	37.46	7.924	10.972	6.809	3.905	5.32	4.987	3.94	8.649	10.382	191.189	188.158	262.673	194.323	193.717	26.833	26.833	26.832	26.832	26.833	71.464	72.443	65.523	69.59
3	61.98	62.019	62.766	62.259	28.22	32.11	31.04	37.42	8.015	10.781	6.701	3.882	5.391	4.516	3.454	8.183	9.785	177.484	174.733	248.933	180.684	179.846	27.299	27.299	27.299	27.299	27.299	73.82	74.894	67.73	71.947
4	61.27	61.311	62.035	61.586	28.13	32.47	31.4	37.7	8.023	11.071	7.197	3.886	4.883	4.328	3.267	8.026	9.522	180.87	177.841	252.234	184.065	183.714	27.927	27.928	27.927	27.928	27.928	58.903	59.699	53.336	57.035
5	59.26	59.307	59.997	59.249	28.28	32.18	31.14	37.73	7.605	10.283	7.073	3.674	5.152	4.256	3.215	7.924	9.766	185.177	182.485	254.444	188.192	187.504	27.617	27.617	27.616	27.616	27.617	57.954	58.897	52.289	56.14
6	64.58	64.619	65.399	64.517	28.22	32.08	31.04	37.81	8.742	11.613	6.893	3.992	5.793	4.587	3.557	8.325	10.273	189.703	186.79	264.699	193.386	192.386	27.265	27.265	27.266	27.266	27.266	68.236	69.269	62.429	66.34
7	61.08	61.128	61.826	61.096	28.13	32.14	31.05	37.65	7.837	11.147	6.757	3.838	4.99	4.606	3.545	8.223	10.081	197.622	194.39	267.761	200.744	200.373	27.323	27.324	27.323	27.323	27.323	69.954	70.955	64.035	68.143
8	61.03	61.086	61.793	61.187	27.91	31.94	30.86	37.24	7.895	10.554	6.863	3.666	5.231	4.692	3.65	8.392	9.955	189.368	186.774	259.702	192.574	191.616	27.012	27.012	27.012	27.012	27.013	72.174	73.131	66.318	70.283
9	59.86	59.902	60.608	60.092	28.22	32.09	31.02	37.56	7.678	10.272	7.057	3.663	3.987	4.499	3.442	8.152	9.938	191.772	189.222	261.24	194.81	195.338	27.291	27.29	27.29	27.29	27.291	62.512	63.438	56.917	60.672
10	59.93	59.974	60.665	60.123	28.06	31.89	30.83	36.8	7.827	10.601	6.952	3.802	5.172	4.347	3.3	8.031	9.218	195.254	192.454	265.187	198.398	197.59	27.318	27.318	27.318	27.318	27.319	58.158	58.94	52.524	56.328
11	59.99	60.034	60.866	60.204	28.28	32.15	31.11	37.41	7.49	10.165	7.173	3.689	5.175	4.553	3.517	8.211	9.78	186.353	183.68	256.17	189.271	188.483	27.319	27.319	27.318	27.319	27.319	55.32	56.139	49.774	53.543
12	59.7	59.743	60.509	59.689	28.13	32.16	31.09	37.78	8.07	10.893	6.97	3.943	4.205	4.238	3.178	7.848	9.813	193.762	190.934	263.944	197	197.653	27.693	27.693	27.693	27.693	27.694	53.089	53.982	47.562	51.21
13	60.78	60.819	61.52	60.817	28.25	32.11	31.05	37.72	7.826	10.657	7.082	3.845	5.11	4.228	3.182	7.925	9.803	189.564	186.763	260.215	192.733	192.278	27.637	27.637	27.637	27.636	27.637	64.28	65.251	58.583	62.461
14	59.3	59.341	60.066	59.538	28.19	32.12	31.08	37.7	7.742	10.64	7.051	3.599	4.054	4.352	3.32	8.072	9.894	192.751	189.817	262.018	195.977	196.291	27.487	27.488	27.487	27.487	27.488	64.678	65.66	58.776	62.828
15	63.2	63.243	63.931	63.353	28.34	31.97	30.9	37.59	7.587	10.286	7.129	3.761	3.887	4.314	3.255	8.072	9.9	199.617	196.992	272.4	202.62	203.373	27.384	27.385	27.384	27.384	27.385	66.582	67.53	60.807	64.741
16	59.26	59.293	60.007	59.454	28.22	32.33	31.27	37.95	7.881	11.061	7.377	3.686	4.166	4.572	3.52	8.308	10.15	171.509	168.384	241.066	174.722	175.154	27.454	27.454	27.454	27.455	27.454	63.695	64.681	57.822	61.83
17	59.57	59.61	60.288	59.615	28.72	32.95	31.89	38.36	8.084	10.671	7.104	3.875	4.508	4.582	3.536	8.381	9.95	196.24	193.676	265.979	199.592	199.705	28.095	28.096	28.095	28.096	28.096	67.093	68.019	61.244	65.276
18	62.46	62.504	63.266	62.696	28.25	31.93	30.84	37.18	8.196	12.213	7.291	3.898	4.428	3.955	2.871	7.699	9.174	193.94	189.898	264.559	197.314	197.497	27.753	27.753	27.753	27.753	27.753	61.62	62.478	55.906	59.771
19	62.91	62.961	63.673	62.942	28.19	32.2	31.13	37.41	7.813	10.143	7.001	3.844	5.1	4.739	3.685	8.434	9.92	200.389	198.017	271.22	203.423	202.853	27.218	27.218	27.218	27.217	27.218	73.657	74.723	67.369	71.803
20	59.75	59.793	60.485	59.994	28.31	32.36	31.22	37.38	8.046	13.216	7.787	3.95	4.679	4.546	3.418	8.26	9.539	193.713	188.794	264.209	197.008	196.905	27.517	27.524	27.516	27.516	27.517	67.998	68.993	61.844	66.128
21	60.91	60.956	61.657	61.143	27.88	31.75	30.68	37.18	7.581	10.044	7.528	3.6	3.969	4.027	2.97	7.701	9.423	178.64	176.176	249.431	181.635	182.112	27.456	27.456	27.456	27.456	27.457	55.081	55.986	49.468	53.269
22	59.32	59.43	60.13	59.209	29.06	34.54	33.39	40.07	7.658	10.455	7.157	3.542	5.282	5.318	4.172	8.88	10.808	170.723	167.909	239.397	173.954	173.145	28.944	28.945	28.944	28.944	28.944	67.998	68.993	61.844	66.128
23	60.46	60.49	61.187	60.617	28.59	32.63	31.52	38.13	7.649	11.563	6.98	3.765	5.051	4.188	3.093	7.959	9.666	190.868	187.012	260.959	193.957	194.571	28.156	28.157	28.157	28.156	28.157	72.601	73.622	66.673	70.76
24	59.93	59.959	60.678	59.832	28.38	31.85	30.83	37.58	7.757	10.017	7.418	3.851	4.05	4.484	3.463	8.13	10.175	180.401	178.162	250.4	183.417	184.151	27.049	27.049	27.049	27.049	27.049	61.734	62.695	55.939	59.861
25	63.2	63.243	63.931	63.353	28.34	31.97	30.9	37.59	7.587	10.286	7.129	3.761	3.887	4.314	3.255	8.072	9.9	199.617	196.992	272.4	202.62	203.373	27.384	27.385	27.384	27.384	27.385	66.582	67.53	60.807	64.741
26	59.44	59.492	60.168	59.433	28.53	31.94	30.85	37.39	7.464	10.185	7.586	3.717	5.146	4.343	3.269	8.093	9.752	184.268	181.798	253.725	187.073	186.407	27.298	27.298	27.298	27.298	27.298	50.641	51.449	45.254	48.768
27	61.25	61.294	62.513	61.279	28.25	32.07	31.01	37.48	8.105	10.963	7.121	3.951	5.065	4.2	3.147	7.948	9.578	191.145	188.292	261.839	194.422	194.02	27.584	27.585	27.584	27.584	27.585	53.63	54.351	48.443	51.883
28	63.94	63.981	64.78	64.133	28.06	31.92	30.88	37.55	7.823	10.77	6.856	3.837	4.073	4.803	3.782	8.448	10.397	188.371	185.465	260.229	191.559	192.203	26.898	26.898	26.898	26.898	26.899	64.926	65.822	59.402	63.101
29	62.05	62.092	62.868	61.993	28.56	32.66	31.58	38.54	7.714	9.955	7.307	3.754	4.002	4.384	3.316	8.196	10.222	197.556	195.319	267.323	200.686	201.322	28.046	28.047	28.046	28.046	28.046	52.477	53.3	46.976	50.675
30	61.65	61.703	62.482	61.684	28.13	31.69	30.62	37.02	8.115	10.44	7.163	3.709	5.486	3.956	2.895	7.691	9.249	190.763	188.432	260.435	194.206	193.106	27.492	27.493	27.491	27.492	27.492	61.765	62.613	55.835	59.927
31	60.28	60.318	61.005	60.452	28.38	31.99	30.93	37.3	7.839	10.288	7.084	3.696	5.088	4.531	3.489	8.252	9.808	185.883	183.438	255.704	189.097	188.373	27.155	27.155	27.155	27.155	27.156	75.473	76.478	69.394	73.6
32	60.26	60.303	61.043	60.54	28.44	32.46	31.39	37.78	7.743	10.866	7.254	3.864	4.813	4.254	3.207	7.908	9.562	194.273	191.169	264.56	197.241	196.946	27.908	27.908	27.908	27.907	27.908	56.287	57.157	50.835	54.386
33	60.44	60.484	61.195	60.766	28.44	32.42	31.38	37.31	8.046	11.072	7.526	3.94	4.828	4.48	3.45	8.218	9.323	190.934	187.939	261.924	194.17	193.856	27.642	27.642	27.642	27.642	27.642	55.494	56.307	49.719	53.678
34	60.44	60.484	61.195	60.766	28.44	32.42	31.38	37.31	8.046	11.072	7.526	3.94	4.828	4.48	3.45	8.218	9.323	190.934	187.939	261.924	194.17	193.856	27.642	27.642	27.642	27.642	27.642	55.494	56.307	49.719	53.678
35	59.44	59.485	60.167	59.397	28.38	32.27	31.2	38.03	7.665	10.997	7.242	3.747	3.926	4.595	3.536	8.345	10.316	186.642	183.355	256.023	189.791	190.469	27.41	27.41	27.409	27.41	27.41	65.338	66.337	59.559	63.482
36	59.99	60.042	60.724	60.313	28.31	32.26	31.15	37.23	7.968	11.585	7.073	3.866	4.777	4.456	3.352	8.134	9.385	186.84	183.273	256.893	190.083	189.718	27.554	27.555	27.555	27.555	27.555	57.547	58.35	52.016	55.721
37	59.42	59.469	60.128	59.436	29	33.01	31.9	38.6	7.899	11.098	7.461	3.831	5.569	4.536	3.444	8.417	10.066	193.399	190.343	263.043	196.657	195.692	28.23	28.23	28.23	28.23	28.231	53.22	54.01	47.734	51.396
38	59.51	59.559	60.211	59.453	28.47	32.41	31.3	38.13	7.722	11.185	7.215	3.749	3.91	4.66	3.564	8.382	10.347	185.609	182.216	255.026	188.784	189.47	27.427	27.427	27.426	27.426	27.427	67.626	68.66	61.786	65.784
39	59.03	59.064	59.75	59.257	28.19	32.08	31.03	37.36	7.537	10.827	7.107	3.655	5.19	4.433	3.389	8.146	9.668	176.903	173.659	245.79	179.931	179.087	27.384	27.384	27.384	27.384	27.384	57.824	58.706	52.04	56.024
40	60.51	60.557	61.239	60.715	28.28	32.27	31.18	37.78	7.704	11.268	7.282	3.718	3.802	4.443	3.38	8.118	9.915	195.959	192.448	266.219	199.031	199.778	27.548	27.549	27.549	27.548	27.549	70.319	71.357	64.371	68.48
41	59.15	59.185	59.896	59.348	28.78	32.9	31.79	38.86	7.725	10.255	7.433	3.577	3.97	4.683	3.589	8.473	10.603	178.453	175.96	247.848	181.786	182.378	27.903	27.903	27.904	27.904	27.904	70.319	71.357	64.371	68.48
42	61.1	61.132	61.88	61.126	28.81	32.87	31.82	38.46	7.681	10.152	7.43	3.701	5.221	4.643	3.604	8.382	10.188	191.548	189.084	260.059	194.613	193.861	27.962	27.962	27.962	27.962	27.963	51.168	52.022	45.753	49.288
43	62.16	62.205	62.958	62.301	27.91	32.18	31.07	37.47	7.846	11.776	7.235	3.844	4.96	4.04	2.934	7.697	9.291	195.458	191.519	265.487	198.583	198.122	27.94	27.941	27.94	27.941	27.941	65.383	66.331	59.633	63.53
44	59.6	59.651	60.414	59.787	28.69	32.91	31.81	38.58	7.957	10.291	7.334	3.66	4.163	4.386	3.302	8.13	10.025	192.88	190.562	262.81	196.18	196.619	28.249	28.25	28.249	28.249	28.249	52.986	53.803	47.678	51.122
45	61.92	61.968	62.706	61.888	28.19	32.18	31.11	37.77	7.967	11.216	7.26	3.894	5.265	4.538	3.476	8.211	10.09	197.744	194.531	267.714	200.947	200.385	27.435	27.436	27.435	27.436	27.435	58.48	59.391	53.005	56.661
46	61.23	61.261	61.977	61.247	28.72	32.81	31.73	38.42	7.764	11.54	7.683	3.722	6.132	4.667	3.577	8.56	10.239	166.963	163.246	238.181	170.224	168.799	27.794	27.794	27.794	27.793	27.794	52.962	53.764	47.724	51.12
47	60.22	60.261	60.987	60.415	28.47	32.23	31.1	37.7	7.955	11.354	7.442	3.903	5.064	4.574	3.462	8.229	10.005	187.055	183.671	257.554	190.328	189.944	27.371	27.372	27.371	27.371	27.372	44.911	45.61	39.952	43.123
48	62.24	62.277	63.046	62.536	28.31	32.6	31.54	37.95	8.038	11.025	7.444	3.851	5.352	4.444	3.397	8.314	9.752	198.062	195.073	268.235	201.355	200.484	27.886	27.885	27.885	27.886	27.886	64.762	65.593	59.155	62.903
49	59.58	59.616	60.326	59.723	28.91	32.78	31.66	38.48	7.697	10.54	7.587	3.753	3.898	4.162	3.054	7.91	9.839	190.805	188.007	260.734	193.921	194.651	28.356	28.357	28.356	28.356	28.357	52.579	53.451	47.261	50.727
50	65.03	65.095	65.721	65.238	15.55	32.87	31.75	38.13	8.304	12.67	6.92	3.896	5.196	4.473	3.379	7.967	9.657	199.13	194.782	274.29	202.512	201.876	29.763	29.764	29.763	29.763	29.762	33.485	34.149	38.227	31.446
UCL	300	300	300	300	#####				20.000	20.000	20.000	20.000	20.000					500.000	500.000	500.000	500.000	500.000									
LCL	5.000	5.000	5.000	5.000		16.000	16.000	16.000	2.000	2.000	2.000	2.000	2.000	1.000	1.000	1.000	1.000	100.000	100.000	100.000	100.000	100.000	16.000	16.000	16.000	16.000	16.000	5.000	5.000	5.000	5.000
Min	59.028	59.064	59.750	59.209	15.554	31.689	30.616	36.798	7.464	9.955	6.688	3.542	3.802	3.955	2.871	7.691	9.174	166.963	163.246	238.181	170.224	168.799	26.833	26.833	26.832	26.832	26.833	33.485	34.149	38.227	31.446
Max	66.653	66.701	67.460	66.744	29.062	34.537	33.385	40.067	8.742	13.216	7.787	4.025	6.132	5.318	4.172	8.880	10.808	200.389	198.017	274.290	203.423	203.373	29.763	29.764	29.763	29.763	29.762	75.473	76.478	69.394	73.600
Average	60.993	61.039	61.768	61.123	28.096	32.330	31.253	37.773	7.862	10.889	7.195	3.794	4.761	4.465	3.401	8.175	9.871	189.261	186.266	259.772	192.440	192.263	27.631	27.631	27.631	27.631	27.631	60.968	61.870	55.486	59.123
Sigma	1.714	1.714	1.732	1.719	1.829	0.465	0.450	0.562	0.236	0.672	0.257	0.116	0.600	0.253	0.252	0.251	0.368	7.788	7.771	8.227	7.793	7.921	0.504	0.505	0.505	0.505	0.504	8.558	8.648	7.758	8.560
Cp	28.69	28.68	28.39	28.59	5.12	11.72	11.29	12.92	12.71	4.46	11.69	25.83	5.00	4.56	3.18	9.54	8.04	8.56	8.58	8.10	8.55	8.42	7.69	7.68	7.68	7.68	7.69	2.18	2.19	2.17	2.11
Ca	0.62	0.62	0.62	0.62					0.35	0.01	0.42	0.80	0.69					0.55	0.57	0.20	0.54	0.54									
CPK	10.89	10.90	10.93	10.88	5.12	11.72	11.29	12.92	8.28	4.41	6.74	5.15	1.53	4.56	3.18	9.54	8.04	3.82	3.70	6.47	3.95	3.88	7.69	7.68	7.68	7.68	7.69	2.18	2.19	2.17	2.11
Result	OK	OK	OK	OK	OK	OK	OK	OK	OK	OK	OK	OK	OK	OK	OK	OK	OK	OK	OK	OK	OK	OK	OK	OK	OK	OK	OK	OK	OK	OK	OK

8.COMBINE REG(+5V)					8.COMBINE REG(+5V)					8.COMBINE REG(+5V)					8.COMBINE REG(+5V)					8.COMBINE REG(+5V)					8.COMBINE REG(+5V)					
Vin:90V Fin47Hz Io:+5V/22A +12V/1A +5Vs/1A -12V/0.5A +3.3V/1A					Vin:115V Fin60Hz Io:+5V/11A +12V/6A +5Vs/2A -12V/1A +3.3V/2A					Vin:135V Fin63Hz Io:+5V/1A +12V/1A +5Vs/0.02A -12V/0.5A +3.3V/0A					Vin:90V Fin47Hz Io:+5V/22A +12V/1A +5Vs/1A -12V/0.5A +3.3V/1A					Vin:115V Fin60Hz Io:+5V/11A +12V/6A +5Vs/2A -12V/1A +3.3V/2A					Vin:135V Fin63Hz Io:+5V/1A +12V/1A +5Vs/0.02A -12V/0.5A +3.3V/0A					
Vdc+5V	Vdc+12V	Vdc+5Vs	Vdc-12V	Vdc+3.3V	Vdc+5V	Vdc+12V	Vdc+5Vs	Vdc-12V	Vdc+3.3V	Vdc+5V	Vdc+12V	Vdc+5Vs	Vdc-12V	Vdc+3.3V	Vpp+5V	Vpp+12V	Vpp+5Vs	Vpp-12V	Vpp+3.3V	Vpp+5V	Vpp+12V	Vpp+5Vs	Vpp-12V	Vpp+3.3V	Vpp+5V	Vpp+12V	Vpp+5Vs	Vpp-12V	Vpp+3.3V	Vdc+5V
4.905	12.412	4.926	-11.993	3.331	5.036	11.937	4.905	-11.962	3.333	5.08	11.906	4.967	-11.975	3.35	0.009	0.006	0.015	0.008	0.004	0.009	0.007	0.015	0.01	0.005	0.004	0.002	0.004	0.007	0.002	5.121
4.909	12.431	4.94	-11.981	3.318	5.043	11.956	4.891	-11.956	3.32	5.094	11.931	5.001	-11.962	3.344	0.008	0.006	0.017	0.009	0.004	0.007	0.005	0.019	0.011	0.005	0.005	0.002	0.003	0.008	0.002	5.125
4.913	12.443	4.992	-12.012	3.311	5.045	11.962	4.97	-11.987	3.313	5.093	11.937	5.034	-11.993	3.332	0.009	0.005	0.017	0.01	0.005	0.008	0.006	0.02	0.011	0.005	0.005	0.002	0.006	0.009	0.002	5.13
4.9	12.418	4.954	-11.968	3.33	5.037	11.943	4.931	-11.943	3.333	5.086	11.925	5.003	-11.95	3.355	0.007	0.005	0.019	0.008	0.005	0.008	0.006	0.021	0.009	0.007	0.005	0.002	0.005	0.007	0.002	5.121
4.916	12.437	4.946	-12	3.315	5.048	11.968	4.925	-11.968	3.318	5.094	11.931	4.988	-11.981	3.336	0.007	0.005	0.02	0.008	0.005	0.009	0.005	0.02	0.01	0.006	0.005	0.002	0.007	0.008	0.002	5.13
4.894	12.412	4.968	-12.012	3.31	5.032	11.943	4.947	-11.975	3.313	5.088	11.918	5.026	-11.981	3.345	0.008	0.006	0.016	0.008	0.004	0.008	0.005	0.019	0.01	0.006	0.004	0.002	0.003	0.006	0.002	5.11
4.911	12.412	4.97	-11.843	3.325	5.041	11.937	4.949	-11.818	3.326	5.086	11.912	5.011	-11.825	3.344	0.009	0.005	0.018	0.009	0.006	0.008	0.006	0.023	0.011	0.005	0.004	0.002	0.004	0.007	0.002	5.125
4.906	12.425	4.963	-12.012	3.316	5.041	11.95	4.938	-11.981	3.32	5.103	11.937	5.016	-11.987	3.343	0.008	0.006	0.016	0.008	0.005	0.008	0.006	0.02	0.008	0.004	0.004	0.002	0.004	0.007	0.002	5.124
4.923	12.443	4.952	-11.993	3.342	5.053	11.975	4.93	-11.975	3.344	5.098	11.95	4.991	-11.981	3.359	0.007	0.007	0.017	0.009	0.005	0.008	0.007	0.019	0.009	0.004	0.004	0.002	0.002	0.007	0.002	5.138
4.914	12.45	4.945	-11.975	3.32	5.048	11.968	4.925	-11.95	3.322	5.097	11.95	4.995	-11.956	3.345	0.008	0.005	0.015	0.008	0.004	0.008	0.005	0.019	0.01	0.006	0.004	0.002	0.004	0.007	0.002	5.134
4.908	12.431	4.948	-11.993	3.32	5.04	11.956	4.926	-11.962	3.323	5.091	11.931	4.993	-11.975	3.342	0.007	0.007	0.016	0.011	0.004	0.007	0.005	0.017	0.01	0.004	0.004	0.002	0.002	0.008	0.002	5.123
4.91	12.443	4.968	-12	3.33	5.048	11.962	4.943	-11.975	3.331	5.1	11.937	5.015	-11.981	3.353	0.008	0.005	0.018	0.009	0.005	0.008	0.005	0.022	0.012	0.006	0.005	0.002	0.005	0.007	0.002	5.134
4.91	12.45	4.958	-12.006	3.323	5.045	11.975	4.937	-11.981	3.325	5.089	11.943	4.997	-11.987	3.341	0.008	0.006	0.017	0.011	0.005	0.008	0.006	0.023	0.011	0.005	0.005	0.003	0.004	0.008	0.002	5.132
4.881	12.381	4.953	-12.006	3.334	5.017	11.918	4.932	-11.975	3.336	5.076	11.893	5.003	-11.981	3.365	0.012	0.005	0.018	0.008	0.006	0.013	0.005	0.021	0.009	0.006	0.007	0.003	0.004	0.007	0.002	5.101
4.931	12.493	4.933	-11.987	3.341	5.065	12.012	4.911	-11.962	3.344	5.114	11.981	4.975	-11.975	3.361	0.007	0.006	0.015	0.011	0.004	0.008	0.007	0.018	0.011	0.004	0.004	0.002	0.002	0.008	0.001	5.149
4.88	12.387	4.9	-11.981	3.33	5.016	11.912	4.861	-11.956	3.332	5.068	11.881	4.964	-11.962	3.355	0.007	0.006	0.016	0.008	0.003	0.008	0.006	0.016	0.009	0.004	0.004	0.002	0.002	0.007	0.002	5.101
4.923	12.475	4.982	-12	3.337	5.055	12	4.961	-11.975	3.339	5.103	11.962	5.024	-11.981	3.357	0.009	0.005	0.016	0.009	0.004	0.008	0.006	0.018	0.01	0.005	0.004	0.002	0.003	0.007	0.002	5.138
4.865	12.387	4.913	-11.825	3.33	5.01	11.906	4.887	-11.793	3.333	5.071	11.887	4.968	-11.793	3.358	0.009	0.006	0.016	0.009	0.005	0.008	0.007	0.018	0.012	0.005	0.005	0.002	0.002	0.007	0.002	5.093
4.931	12.432	4.951	-11.987	3.327	5.069	12.025	4.93	-11.956	3.33	5.119	11.993	4.994	-11.962	3.348	0.007	0.007	0.016	0.01	0.005	0.006	0.006	0.017	0.012	0.005	0.004	0.003	0.003	0.007	0.002	5.155
4.865	12.356	4.926	-11.981	3.33	5.002	11.881	4.863	-11.956	3.332	5.066	11.868	5.015	-11.956	3.356	0.008	0.006	0.014	0.009	0.003	0.008	0.006	0.016	0.009	0.004	0.005	0.004	0.002	0.006	0.002	5.088
4.93	12.475	4.969	-12.006	3.339	5.063	12	4.948	-11.981	3.341	5.11	11.968	5.011	-11.993	3.359	0.008	0.006	0.015	0.009	0.004	0.008	0.007	0.018	0.01	0.005	0.004	0.002	0.002	0.007	0.001	5.147
4.948	12.368	4.95	-11.906	3.318	5.071	11.931	4.925	-11.862	3.32	5.127	11.887	4.998	-11.887	3.341	0.01	0.007	0.021	0.007	0.004	0.01	0.005	0.026	0.013	0.006	0.005	0.003	0.004	0.01	0.002	5.152
4.876	12.468	4.956	-12.006	3.328	5.011	11.906	4.935	-11.981	3.331	5.065	11.881	5.001	-11.987	3.353	0.008	0.006	0.016	0.009	0.005	0.009	0.007	0.018	0.009	0.005	0.006	0.003	0.002	0.006	0.003	5.097
4.913	12.406	4.946	-11.843	3.339	5.054	12.031	4.918	-11.812	3.342	5.116	11.993	5.003	-11.825	3.366	0.008	0.006	0.018	0.008	0.004	0.007	0.006	0.018	0.01	0.005	0.004	0.002	0.003	0.007	0.002	5.152
4.931	12.437	4.933	-11.987	3.341	5.065	12.012	4.911	-11.962	3.344	5.114	11.981	4.975	-11.975	3.361	0.007	0.006	0.015	0.011	0.004	0.008	0.007	0.018	0.011	0.004	0.004	0.002	0.002	0.008	0.001	5.149
4.91	12.437	4.953	-12.012	3.321	5.05	11.993	4.914	-11.987	3.325	5.113	11.975	5.02	-11.993	3.346	0.008	0.008	0.016	0.008	0.006	0.008	0.008	0.019	0.01	0.006	0.004	0.002	0.003	0.006	0.002	5.138
4.911	12.375	4.95	-12.006	3.333	5.045	11.968	4.93	-11.987	3.335	5.098	11.943	4.995	-11.987	3.356	0.008	0.007	0.018	0.01	0.004	0.008	0.008	0.021	0.009	0.004	0.004	0.003	0.003	0.007	0.002	5.132
4.9	12.381	4.984	-11.993	3.333	5.03	11.931	4.958	-11.962	3.335	5.08	11.906	5.032	-11.975	3.355	0.007	0.006	0.014	0.01	0.006	0.008	0.005	0.018	0.012	0.006	0.005	0.002	0.003	0.007	0.002	5.113
4.935	12.443	4.955	-11.993	3.328	5.068	12.025	4.933	-11.968	3.33	5.12	11.993	4.997	-11.981	3.348	0.008	0.006	0.015	0.009	0.004	0.008	0.008	0.02	0.01	0.006	0.004	0.002	0.003	0.008	0.002	5.154
4.909	12.368	4.894	-11.831	3.311	5.053	11.993	4.856	-11.806	3.313	5.112	11.968	4.953	-11.812	3.332	0.009	0.007	0.015	0.008	0.004	0.009	0.008	0.018	0.01	0.005	0.005	0.005	0.003	0.007	0.002	5.14
4.923	12.387	4.96	-11.975	3.326	5.056	11.993	4.939	-11.943	3.33	5.108	11.975	5.004	-11.956	3.35	0.008	0.008	0.016	0.01	0.004	0.009	0.009	0.019	0.01	0.004	0.004	0.002	0.003	0.006	0.001	5.14
4.882	12.368	4.938	-12.006	3.329	5.015	11.925	4.866	-11.981	3.326	5.083	11.912	4.988	-11.987	3.353	0.009	0.007	0.016	0.01	0.003	0.008	0.007	0.018	0.01	0.006	0.005	0.004	0.003	0.008	0.002	5.105
4.911	12.431	4.956	-11.981	3.326	5.041	11.968	4.934	-11.962	3.328	5.091	11.931	4.999	-11.968	3.348	0.007	0.006	0.014	0.008	0.003	0.006	0.007	0.016	0.009	0.004	0.004	0.002	0.003	0.006	0.001	5.125
4.911	12.437	4.956	-11.981	3.326	5.041	11.968	4.934	-11.962	3.328	5.091	11.931	4.999	-11.968	3.348	0.007	0.006	0.014	0.008	0.003	0.006	0.007	0.016	0.009	0.004	0.004	0.002	0.003	0.006	0.001	5.125
4.88	12.375	4.953	-11.993	3.332	5.013	11.906	4.93	-11.968	3.335	5.068	11.868	5.003	-11.968	3.358	0.008	0.006	0.017	0.01	0.004	0.008	0.006	0.021	0.008	0.006	0.004	0.003	0.003	0.006	0.002	5.097
4.895	12.381	4.956	-11.968	3.325	5.026	11.912	4.936	-11.95	3.327	5.077	11.893	5	-11.956	3.346	0.009	0.007	0.016	0.01	0.005	0.01	0.008	0.02	0.01	0.006	0.004	0.002	0.003	0.009	0.002	5.11
4.886	12.443	4.966	-12.006	3.307	5.032	11.956	4.938	-11.981	3.31	5.095	11.937	5.026	-11.981	3.336	0.008	0.005	0.016	0.009	0.005	0.007	0.006	0.016	0.01	0.004	0.004	0.002	0.003	0.007	0.002	5.12
4.888	12.368	4.959	-11.993	3.335	5.018	11.9	4.938	-11.968	3.338	5.065	11.862	5.001	-11.975	3.356	0.008	0.006	0.014	0.009	0.004	0.008	0.006	0.019	0.009	0.005	0.005	0.003	0.003	0.007	0.002	5.101
4.866	12.387	4.943	-12.006	3.317	5.006	11.906	4.913	-11.975	3.32	5.064	11.881	4.999	-11.981	3.342	0.009	0.007	0.017	0.009	0.003	0.009	0.009	0.017	0.009	0.004	0.004	0.003	0.003	0.006	0.002	5.092
4.888	12.368	4.973	-11.993	3.333	5.02	11.9	4.951	-11.968	3.336	5.068	11.862	5.016	-11.975	3.355	0.007	0.005	0.021	0.009	0.004	0.008	0.005	0.022	0.009	0.006	0.005	0.003	0.003	0.007	0.003	5.102
4.917	12.431	4.964	-12.006	3.34	5.046	11.962	4.943	-11.981	3.342	5.091	11.931	5.006	-11.987	3.36	0.009	0.006	0.017	0.011	0.005	0.009	0.007	0.018	0.011	0.006	0.005	0.002	0.003	0.009	0.003	5.13
4.896	12.443	4.944	-11.975	3.323	5.035	11.975	4.916	-11.943	3.325	5.095	11.937	5	-11.956	3.349	0.007	0.006	0.016	0.009	0.004	0.008	0.006	0.018	0.007	0.004	0.005	0.006	0.002	0.006	0.001	5.123
4.885	12.368	4.962	-12.006	3.323	5.016	11.893	4.941	-11.975	3.325	5.066	11.875	5.006	-11.987	3.345	0.009	0.006	0.016	0.009	0.003	0.008	0.008	0.017	0.011	0.005	0.003	0.003	0.002	0.008	0.002	5.1
4.923	12.462	4.96	-11.825	3.338	5.058	11.987	4.938	-11.806	3.34	5.114	11.975	5.007	-11.806	3.361	0.008	0.007	0.015	0.007	0.003	0.008	0.006	0.019	0.008	0.006	0.004	0.002	0.003	0.007	0.002	5.143
4.9	12.406	4.938	-11.975	3.315	5.033	11.931	4.918	-11.95	3.317	5.081	11.906	4.981	-11.956	3.337	0.008	0.006	0.018	0.01	0.005	0.009	0.008	0.019	0.01	0.006	0.005	0.002	0.003	0.007	0.002	5.118
4.87	12.406	4.921	-12.006	3.303	5.014	11.925	4.875	-11.975	3.308	5.09	11.925	5.012	-11.968	3.342	0.009	0.007	0.017	0.007	0.005	0.008	0.008	0.019	0.01	0.005	0.004	0.003	0.003	0.006	0.002	5.101
4.905	12.406	5.011	-11.868	3.328	5.036	11.925	4.99	-11.843	3.33	5.081	11.906	5.053	-11.856	3.348	0.008	0.005	0.018	0.008	0.003	0.007	0.006	0.019	0.009	0.004	0.004	0.002	0.003	0.007	0.002	5.123
4.884	12.443	4.938	-12.012	3.311	5.026	11.956	4.915	-11.981	3.311	5.093	11.95	4.998	-11.975	3.348	0.01	0.008	0.017	0.008	0.004	0.011	0.016	0.018	0.01	0.004	0.003	0.003	0.003	0.006	0.002	5.112
4.925	12.456	4.957	-11.981	3.328	5.056	11.981	4.936	-11.956	3.33	5.104	11.962	5	-11.968	3.349	0.008	0.006	0.019	0.008	0.003	0.008	0.007	0.018	0.01	0.004	0.004	0.003	0.002	0.007	0.001	5.141
4.875	12.375	4.945	-11.95	3.326	5.018	11.906	4.92	-11.925	3.328	5.072	11.887	4.991	-11.931	3.346	0.01	0.007	0.023	0.01	0.006	0.009	0.008	0.027	0.012	0.006	0.006	0.004	0.007	0.009	0.005	5.11
5.25	12.600	5.250	-10.800	3.465	5.25	12.600	5.250	-10.800	3.465	5.25	12.600	5.250	-10.800	3.465	0.070	0.120	0.100	0.250	0.050	0.070	0.120	0.100	0.250	0.050	0.070	0.120	0.100	0.250	0.050	5.25
4.75	11.400	4.750	-13.200	3.135	4.75	11.400	4.750	-13.200	3.135	4.75	11.400	4.750	-13.200	3.135																4.75
4.865	12.356	4.894	-12.012	3.303	5.002	11.881	4.856	-11.987	3.308	5.064	11.862	4.953	-11.993	3.332	0.007	0.005	0.014	0.007	0.003	0.006	0.005	0.015	0.007	0.004	0.003	0.002	0.002	0.006	0.001	5.088
4.948	12.493	5.011	-11.825	3.342	5.071	12.031	4.990	-11.793	3.344	5.127	11.993	5.053	-11.793	3.366	0.012	0.008	0.023	0.011	0.006	0.013	0.016	0.027	0.013	0.007	0.007	0.006	0.007	0.010	0.005	5.155
4.903	12.416	4.952	-11.973	3.326	5.038	11.953	4.925	-11.946	3.328	5.091	11.927	5.001	-11.953	3.350	0.008	0.006	0.017	0.009	0.004	0.008	0.007	0.019	0.010	0.005	0.004	0.003	0.003	0.007	0.002	5.123
0.020	0.035	0.021	0.053	0.010	0.018	0.038	0.027	0.054	0.009	0.017	0.037	0.018	0.053	0.008	0.001	0.001	0.002	0.001	0.001	0.001	0.002	0.002	0.001	0.001	0.001	0.001	0.001	0.001	0.001	0.018
4.14	5.73	4.01	7.49	5.76	4.56	5.22	3.07	7.45	5.82	4.91	5.36	4.52	7.50	6.66	20.12	45.55	14.60	73.90	16.76	17.75	21.58	11.39	66.47	17.04	29.82	45.41	27.80	84.73	25.12	4.53
0.39	0.69	0.19	0.02	0.16	0.15	0.08	0.30	0.04	0.17	0.37	0.12	0.00	0.04	0.30																0.49
2.54	1.75	3.23	7.32	4.85	3.87	4.81	2.15	7.11	4.82	3.12	4.71	4.50	7.21	4.65	20.12	45.55	14.60	73.90	16.76	17.75	21.58	11.39	66.47	17.04	29.82	45.41	27.80	84.73	25.12	2.30
OK	**OK**	**OK**	**OK**	**OK**	**OK**	**OK**	**OK**	**OK**	**OK**	**OK**	**OK**	**OK**	**OK**	**OK**	**OK**	**OK**	**OK**	**OK**	**OK**	**OK**	**OK**	**OK**	**OK**	**OK**	**OK**	**OK**	**OK**	**OK**	**OK**	**OK**

9.COMBINE REG(+12V)				9.COMBINE REG(+12V)					9.COMBINE REG(+12V)					9.COMBINE REG(+12V)					9.COMBINE REG(+12V)					9.COMBINE REG(+12V)					9.COMBINE REG(+12V)					10.COM	
Vin:90V Fin47Hz Io:+5V/5A +12V/16A +5Vs/2A -12V/0.5A +3.3V/5A				Vin:115V Fin60Hz Io:+5V/5A +12V/8A +5Vs/1A -12V/0.3A +3.3V/3A					Vin:135V Fin63Hz Io:+5V/1A +12V/0A +5Vs/0A -12V/0A +3.3V/0A					Vin:90V Fin47Hz Io:+5V/5A +12V/16A +5Vs/2A -12V/1A +3.3V/5A					Vin:115V Fin60Hz Io:+5V/5A +12V/8A +5Vs/1A -12V/0.3A +3.3V/3A					Vin:135V Fin63Hz Io:+5V/1A +12V/0A +5Vs/0A -12V/0A +3.3V/0A					Vin: Io:+5V/5A -12V.	
Vdc+12V	Vdc+5Vs	Vdc-12V	Vdc+3.3V	Vdc+5V	Vdc+12V	Vdc+5Vs	Vdc-12V	Vdc+3.3V	Vdc+5V	Vdc+12V	Vdc+5Vs	Vdc-12V	Vdc+3.3V	Vpp+5V	Vpp+12V	Vpp+5Vs	Vpp-12V	Vpp+3.3V	Vpp+5V	Vpp+12V	Vpp+5Vs	Vpp-12V	Vpp+3.3V	Vpp+5V	Vpp+12V	Vpp+5Vs	Vpp-12V	Vpp+3.3V	Vdc+5V	Vdc+12V
11.6	4.9	-11.993	3.328	5.093	11.762	4.932	-11.993	3.337	5.058	12.037	4.968	-12	3.35	0.011	0.014	0.023	0.014	0.006	0.006	0.004	0.016	0.009	0.006	0.006	0.002	0.003	0.009	0.001	5.056	11.962
11.618	4.892	-11.987	3.31	5.103	11.781	4.943	-11.981	3.325	5.065	12.075	5.002	-11.981	3.344	0.011	0.012	0.023	0.018	0.007	0.006	0.004	0.016	0.008	0.005	0.006	0.001	0.004	0.01	0.001	5.07	11.993
11.631	4.963	-12.012	3.305	5.103	11.787	4.997	-12.012	3.316	5.063	12.081	5.035	-12.012	3.332	0.01	0.014	0.023	0.015	0.009	0.006	0.004	0.017	0.009	0.005	0.007	0.002	0.006	0.012	0.001	5.07	11.993
11.612	4.922	-11.968	3.325	5.096	11.775	4.961	-11.968	3.337	5.061	12.05	5.004	-11.968	3.355	0.011	0.013	0.027	0.012	0.009	0.006	0.004	0.017	0.008	0.004	0.006	0.001	0.005	0.008	0.001	5.062	11.987
11.637	4.918	-12	3.31	5.105	11.787	4.951	-12	3.321	5.066	12.062	4.988	-12	3.336	0.01	0.013	0.021	0.012	0.008	0.006	0.004	0.017	0.01	0.006	0.006	0.001	0.006	0.009	0.001	5.071	11.993
11.6	4.935	-12.018	3.298	5.09	11.768	4.973	-12.006	3.316	5.065	12.037	5.027	-12.006	3.346	0.012	0.013	0.025	0.012	0.009	0.006	0.004	0.016	0.008	0.005	0.006	0.001	0.003	0.007	0.001	5.061	11.975
11.606	4.943	-11.843	3.32	5.097	11.768	4.976	-11.843	3.33	5.057	12.062	5.011	-11.843	3.345	0.009	0.011	0.029	0.012	0.007	0.006	0.004	0.018	0.011	0.004	0.008	0.002	0.005	0.01	0.001	5.064	11.975
11.618	4.937	-12.012	3.31	5.1	11.775	4.971	-12.006	3.323	5.078	12.075	5.016	-12.006	3.343	0.011	0.013	0.024	0.014	0.006	0.006	0.004	0.018	0.008	0.004	0.007	0.002	0.004	0.008	0.001	5.073	11.987
11.643	4.925	-11.993	3.338	5.109	11.8	4.957	-12	3.346	5.075	12.081	4.991	-12.006	3.359	0.01	0.015	0.022	0.013	0.006	0.005	0.004	0.015	0.009	0.003	0.007	0.002	0.004	0.01	0.002	5.075	12
11.625	4.917	-11.975	3.314	5.108	11.8	4.957	-11.968	3.327	5.069	12.081	4.996	-11.975	3.345	0.011	0.012	0.024	0.017	0.009	0.005	0.004	0.016	0.01	0.003	0.006	0.001	0.004	0.009	0.001	5.075	12.006
11.631	4.92	-11.993	3.315	5.098	11.787	4.955	-11.993	3.326	5.07	12.05	4.993	-11.993	3.343	0.012	0.011	0.025	0.015	0.008	0.006	0.004	0.016	0.01	0.003	0.007	0.002	0.002	0.01	0.001	5.066	11.987
11.631	4.938	-12.006	3.321	5.108	11.787	4.975	-12.006	3.335	5.073	12.068	5.016	-12	3.353	0.011	0.012	0.021	0.013	0.006	0.011	0.004	0.018	0.02	0.011	0.007	0.001	0.003	0.008	0.001	5.07	11.993
11.637	4.932	-12.006	3.32	5.103	11.8	4.963	-12.006	3.328	5.066	12.062	4.998	-12.006	3.341	0.01	0.012	0.025	0.011	0.007	0.006	0.004	0.016	0.01	0.005	0.007	0.002	0.003	0.009	0.001	5.068	12
11.587	4.925	-12.006	3.326	5.078	11.743	4.962	-12	3.343	5.045	12.05	5.005	-12.006	3.366	0.014	0.012	0.023	0.012	0.005	0.009	0.004	0.015	0.009	0.004	0.009	0.001	0.004	0.009	0.001	5.049	11.95
11.675	4.906	-11.987	3.337	5.121	11.831	4.938	-11.993	3.347	5.09	12.118	4.976	-11.993	3.362	0.01	0.014	0.02	0.012	0.006	0.007	0.005	0.015	0.01	0.004	0.007	0.002	0.002	0.01	0.001	5.091	12.043
11.575	4.854	-11.981	3.321	5.076	11.737	4.908	-11.981	3.335	5.043	12.006	4.965	-11.981	3.355	0.01	0.012	0.022	0.011	0.005	0.006	0.004	0.014	0.009	0.003	0.008	0.002	0.002	0.009	0.001	5.041	11.943
11.662	4.956	-12	3.333	5.112	11.825	4.989	-12	3.343	5.081	12.087	5.025	-12.006	3.357	0.01	0.01	0.022	0.014	0.006	0.006	0.004	0.015	0.009	0.005	0.008	0.003	0.002	0.008	0.001	5.079	12.025
11.568	4.883	-11.825	3.316	5.074	11.731	4.925	-11.818	3.336	5.047	12.018	4.969	-11.818	3.358	0.01	0.012	0.024	0.013	0.007	0.006	0.005	0.015	0.009	0.005	0.008	0.002	0.002	0.008	0.001	5.038	11.943
11.668	4.924	-11.987	3.323	5.127	11.837	4.958	-11.981	3.333	5.092	12.125	4.995	-11.987	3.349	0.01	0.012	0.019	0.014	0.005	0.006	0.005	0.013	0.008	0.004	0.009	0.003	0.002	0.01	0.001	5.093	12.05
11.525	4.855	-11.981	3.322	5.053	11.706	4.895	-11.987	3.326	5.039	12.012	5.015	-11.981	3.356	0.011	0.012	0.022	0.011	0.005	0.006	0.006	0.014	0.008	0.004	0.007	0.002	0.001	0.008	0.001	5.033	11.925
11.656	4.942	-12.006	3.335	5.12	11.825	4.975	-12.012	3.345	5.085	12.112	5.012	-12.012	3.36	0.011	0.013	0.022	0.016	0.008	0.007	0.005	0.014	0.009	0.004	0.006	0.002	0.002	0.009	0.001	5.086	12.025
11.625	4.92	-11.906	3.31	5.128	11.781	4.957	-11.912	3.323	5.11	12.018	4.999	-11.931	3.341	0.012	0.011	0.029	0.018	0.008	0.009	0.006	0.021	0.012	0.005	0.007	0.002	0.002	0.006	0.001	5.106	11.943
11.556	4.929	-12.006	3.324	5.074	11.731	4.965	-12.006	3.337	5.038	12.025	5.002	-12.006	3.353	0.012	0.014	0.022	0.014	0.005	0.007	0.005	0.017	0.009	0.006	0.008	0.002	0.002	0.008	0.001	5.043	11.943
11.687	4.918	-11.85	3.336	5.124	11.856	4.96	-11.843	3.349	5.1	12.112	5.005	-11.85	3.366	0.01	0.013	0.023	0.012	0.006	0.005	0.004	0.016	0.009	0.004	0.006	0.002	0.002	0.008	0.001	5.091	12.062
11.675	4.906	-11.987	3.337	5.121	11.831	4.938	-11.993	3.347	5.09	12.118	4.976	-11.993	3.362	0.01	0.014	0.02	0.012	0.006	0.007	0.005	0.015	0.01	0.004	0.007	0.002	0.002	0.01	0.001	5.091	12.043
11.656	4.905	-12.012	3.316	5.112	11.818	4.961	-12.012	3.328	5.09	12.106	5.021	-12.012	3.346	0.012	0.014	0.021	0.012	0.007	0.006	0.005	0.014	0.01	0.004	0.006	0.002	0.002	0.008	0.001	5.086	12.025
11.637	4.924	-12.012	3.328	5.104	11.8	4.956	-12.006	3.339	5.071	12.075	4.996	-12.006	3.356	0.012	0.011	0.023	0.017	0.005	0.006	0.006	0.017	0.009	0.005	0.007	0.002	0.002	0.009	0.001	5.073	12
11.606	4.951	-11.993	3.327	5.088	11.762	4.99	-11.993	3.339	5.058	12.025	5.033	-11.993	3.355	0.012	0.014	0.029	0.018	0.007	0.006	0.004	0.015	0.01	0.005	0.006	0.002	0.002	0.009	0.001	5.056	11.956
11.687	4.927	-12	3.323	5.126	11.843	4.96	-12	3.334	5.098	12.131	4.998	-12	3.349	0.011	0.014	0.02	0.012	0.005	0.007	0.005	0.015	0.011	0.004	0.007	0.002	0.002	0.01	0.002	5.092	12.05
11.65	4.874	-11.831	3.304	5.113	11.812	4.912	-11.831	3.316	5.087	12.106	4.955	-11.831	3.333	0.013	0.014	0.026	0.014	0.007	0.008	0.006	0.014	0.009	0.005	0.007	0.002	0.001	0.008	0.001	5.085	12.018
11.656	4.932	-11.975	3.321	5.115	11.825	4.966	-11.968	3.333	5.088	12.1	5.005	-11.975	3.35	0.011	0.016	0.021	0.013	0.007	0.005	0.005	0.015	0.01	0.004	0.007	0.002	0.002	0.009	0.001	5.082	12.031
11.593	4.87	-12.012	3.318	5.088	11.762	4.944	-12.006	3.336	5.063	12.031	4.99	-12.006	3.354	0.011	0.013	0.021	0.013	0.005	0.006	0.005	0.015	0.009	0.004	0.008	0.003	0.002	0.008	0.001	5.057	11.968
11.637	4.928	-11.981	3.321	5.099	11.793	4.962	-11.981	3.332	5.069	12.056	5	-11.987	3.348	0.01	0.013	0.019	0.012	0.004	0.005	0.004	0.015	0.009	0.004	0.008	0.003	0.003	0.008	0.001	5.066	11.987
11.637	4.928	-11.981	3.321	5.099	11.793	4.962	-11.981	3.332	5.069	12.056	5	-11.987	3.348	0.01	0.013	0.019	0.012	0.004	0.005	0.004	0.015	0.009	0.004	0.008	0.003	0.003	0.008	0.001	5.066	11.987
11.568	4.92	-11.993	3.326	5.073	11.731	4.959	-11.993	3.34	5.043	12.006	5.003	-11.993	3.358	0.01	0.012	0.024	0.012	0.006	0.006	0.004	0.016	0.008	0.005	0.009	0.002	0.002	0.008	0.001	5.042	11.931
11.568	4.93	-11.975	3.32	5.083	11.737	4.963	-11.975	3.331	5.048	12.05	5	-11.975	3.347	0.014	0.014	0.022	0.013	0.007	0.007	0.006	0.016	0.011	0.004	0.008	0.002	0.002	0.011	0.001	5.052	11.943
11.606	4.93	-12.012	3.301	5.097	11.781	4.978	-12.006	3.316	5.069	12.075	5.028	-12.006	3.337	0.009	0.012	0.022	0.011	0.007	0.007	0.005	0.017	0.008	0.005	0.007	0.002	0.002	0.01	0.001	5.066	11.993
11.562	4.932	-11.993	3.331	5.075	11.725	4.965	-11.993	3.341	5.04	12	5.002	-11.993	3.357	0.01	0.012	0.02	0.012	0.007	0.006	0.004	0.017	0.008	0.004	0.008	0.002	0.002	0.008	0.001	5.043	11.925
11.568	4.905	-12.006	3.311	5.068	11.731	4.95	-12	3.324	5.038	12.018	5	-12.006	3.343	0.013	0.015	0.02	0.011	0.007	0.007	0.006	0.015	0.008	0.005	0.009	0.002	0.002	0.008	0.001	5.036	11.943
11.562	4.946	-11.993	3.329	5.077	11.725	4.979	-11.993	3.34	5.043	12	5.016	-11.993	3.355	0.01	0.012	0.026	0.013	0.006	0.006	0.004	0.018	0.008	0.004	0.007	0.002	0.003	0.008	0.001	5.044	11.925
11.631	4.937	-12.006	3.335	5.103	11.787	4.97	-12.006	3.345	5.071	12.062	5.006	-12.006	3.36	0.013	0.013	0.02	0.013	0.006	0.008	0.006	0.016	0.009	0.004	0.008	0.002	0.001	0.011	0.001	5.069	11.993
11.631	4.91	-11.975	3.317	5.098	11.793	4.953	-11.975	3.33	5.071	12.062	5.001	-11.975	3.35	0.011	0.012	0.018	0.013	0.006	0.005	0.004	0.015	0.008	0.004	0.007	0.002	0.002	0.008	0.001	5.066	12.006
11.55	4.934	-12.006	3.318	5.074	11.718	4.968	-12.006	3.329	5.041	12.006	5.007	-12.006	3.345	0.013	0.014	0.023	0.014	0.006	0.006	0.006	0.015	0.009	0.004	0.008	0.002	0.002	0.01	0.001	5.041	11.931
11.656	4.931	-11.831	3.332	5.115	11.812	4.965	-11.831	3.342	5.091	12.112	5.008	-11.831	3.361	0.011	0.012	0.021	0.009	0.005	0.007	0.005	0.016	0.008	0.005	0.007	0.002	0.002	0.008	0.001	5.084	12.018
11.606	4.913	-11.968	3.312	5.09	11.756	4.945	-11.968	3.321	5.06	12.025	4.982	-11.975	3.337	0.011	0.014	0.026	0.012	0.009	0.006	0.006	0.015	0.008	0.004	0.007	0.003	0.002	0.009	0.001	5.055	11.962
11.593	4.892	-12	3.3	5.082	11.768	4.951	-11.993	3.318	5.068	12.056	5.015	-11.993	3.343	0.012	0.014	0.023	0.011	0.009	0.007	0.006	0.015	0.008	0.004	0.007	0.002	0.002	0.009	0.001	5.056	11.981
11.6	4.986	-11.868	3.325	5.094	11.756	5.018	-11.868	3.335	5.057	12.043	5.054	-11.868	3.348	0.01	0.012	0.022	0.016	0.005	0.006	0.005	0.016	0.009	0.004	0.008	0.002	0.002	0.009	0.001	5.056	11.962
11.606	4.906	-12.012	3.298	5.095	11.787	4.951	-12.006	3.322	5.065	12.087	5	-12	3.349	0.013	0.012	0.024	0.01	0.005	0.007	0.005	0.016	0.007	0.003	0.007	0.002	0.002	0.009	0.001	5.065	12
11.643	4.931	-11.987	3.323	5.113	11.806	4.963	-11.987	3.334	5.081	12.087	5	-11.987	3.349	0.01	0.011	0.02	0.015	0.004	0.006	0.005	0.017	0.009	0.002	0.007	0.002	0.002	0.009	0.001	5.078	12.012
11.568	4.915	-11.95	3.321	5.081	11.731	4.951	-11.95	3.331	5.051	12.012	4.992	-11.956	3.347	0.012	0.013	0.026	0.011	0.006	0.007	0.007	0.022	0.01	0.005	0.009	0.001	0.006	0.01	0.004	5.046	11.95
12.600	5.250	-10.800	3.465	5.25	12.600	5.250	-10.800	3.465	5.25	12.600	5.250	-10.800	3.465	0.070	0.120	0.100	0.250	0.050	0.070	0.120	0.100	0.250	0.050	0.070	0.120	0.100	0.250	0.050	5.25	12.600
11.400	4.750	-13.200	3.135	4.75	11.400	4.750	-13.200	3.135	4.75	11.400	4.750	-13.200	3.135																4.75	11.400
11.525	4.854	-12.018	3.298	5.053	11.706	4.895	-12.012	3.316	5.038	12.000	4.955	-12.012	3.332	0.009	0.010	0.018	0.009	0.004	0.005	0.004	0.013	0.007	0.002	0.006	0.001	0.001	0.006	0.001	5.033	11.925
11.687	4.986	-11.825	3.338	5.128	11.856	5.018	-11.818	3.349	5.110	12.131	5.054	-11.818	3.366	0.014	0.016	0.029	0.018	0.009	0.011	0.007	0.022	0.020	0.011	0.009	0.003	0.006	0.012	0.004	5.106	12.062
11.617	4.920	-11.974	3.320	5.098	11.779	4.958	-11.973	3.332	5.067	12.060	5.002	-11.974	3.350	0.011	0.013	0.023	0.013	0.006	0.006	0.005	0.016	0.009	0.004	0.007	0.002	0.003	0.009	0.001	5.066	11.985
0.039	0.025	0.053	0.010	0.017	0.037	0.021	0.053	0.009	0.018	0.037	0.018	0.053	0.008	0.001	0.001	0.003	0.002	0.001	0.001	0.001	0.002	0.002	0.001	0.001	0.001	0.001	0.001	0.000	0.017	0.037
5.19	3.34	7.52	5.27	4.77	5.46	3.94	7.52	6.05	4.59	5.43	4.53	7.59	6.69	16.12	29.08	9.75	38.03	10.37	18.85	45.37	17.15	43.39	12.19	23.26	73.82	26.14	73.07	35.21	4.77	5.46
0.64	0.32	0.02	0.12	0.39	0.37	0.17	0.02	0.20	0.27	0.10	0.01	0.02	0.30																0.26	0.03
1.87	2.28	7.36	4.62	2.91	3.45	3.29	7.35	4.87	3.36	4.88	4.50	7.43	4.66	16.12	29.08	9.75	38.03	10.37	18.85	45.37	17.15	43.39	12.19	23.26	73.82	26.14	73.07	35.21	3.52	5.32
OK	**OK**	**OK**	**OK**	**OK**	**OK**	**OK**	**OK**	**OK**	**OK**	**OK**	**OK**	**OK**	**OK**	**OK**	**OK**	**OK**	**OK**	**OK**	**OK**	**OK**	**OK**	**OK**	**OK**	**OK**	**OK**	**OK**	**OK**	**OK**	**OK**	**OK**

IBINE REG(+3.3V)			10.COMBINE REG(+3.3V)					10.COMBINE REG(+3.3V)					10.COMBINE REG(+3.3V)					10.COMBINE REG(+3.3V)					10.COMBINE REG(+3.3V)					11.COMBINE RE		
135V Fin63Hz +12V/2A +5Vs/0.5A /0.1A +3.3V/0A			Vin:115V Fin60Hz lo:+5V/10A +12V/5A +5Vs/1A -12V/0.5A +3.3V/9A					Vin:90V Fin47Hz lo:+5V/5A +12V/10A +5Vs/2A -12V/1A +3.3V/18A					Vin:135V Fin63Hz lo:+5V/5A +12V/2A +5Vs/0.5A -12V/0.1A +3.3V/0A					Vin:115V Fin60Hz lo:+5V/10A +12V/5A +5Vs/1A -12V/0.5A +3.3V/9A					Vin:90V Fin47Hz lo:+5V/5A +12V/10A +5Vs/2A -12V/1A +3.3V/18A					Vin:90V Fin47 lo:+5V/22A +12V/7A -12V/1A +3.3V/		
Vdc+5Vs	Vdc-12V	Vdc+3.3V	Vdc+5V	Vdc+12V	Vdc+5Vs	Vdc-12V	Vdc+3.3V	Vdc+5V	Vdc+12V	Vdc+5Vs	Vdc-12V	Vdc+3.3V	Vpp+5V	Vpp+12V	Vpp+5Vs	Vpp-12V	Vpp+3.3V	Vpp+5V	Vpp+12V	Vpp+5Vs	Vpp-12V	Vpp+3.3V	Vpp+5V	Vpp+12V	Vpp+5Vs	Vpp-12V	Vpp+3.3V	Vdc+5V	Vdc+12V	Vdc+5Vs
4.951	-11.993	3.345	5.031	11.975	4.926	-11.993	3.329	5.08	11.743	4.896	-11.975	3.318	0.003	0.002	0.008	0.008	0.002	0.007	0.005	0.016	0.008	0.005	0.013	0.013	0.024	0.01	0.009	4.948	12.193	4.892
4.975	-11.981	3.336	5.038	11.993	4.936	-11.981	3.315	5.085	11.768	4.885	-11.975	3.3	0.004	0.002	0.009	0.009	0.002	0.006	0.005	0.016	0.009	0.005	0.012	0.014	0.025	0.016	0.007	4.946	12.206	4.88
5.018	-12.012	3.326	5.042	12	4.991	-12.012	3.308	5.088	11.775	4.958	-12	3.295	0.004	0.002	0.009	0.01	0.003	0.007	0.005	0.017	0.011	0.005	0.012	0.013	0.022	0.013	0.009	4.956	12.212	4.953
4.984	-11.968	3.348	5.033	11.987	4.954	-11.968	3.327	5.08	11.756	4.916	-11.956	3.313	0.004	0.002	0.009	0.007	0.002	0.006	0.004	0.02	0.009	0.005	0.013	0.012	0.028	0.012	0.01	4.944	12.193	4.911
4.971	-12	3.331	5.043	12.006	4.945	-12	3.313	5.09	11.781	4.913	-11.981	3.301	0.004	0.003	0.008	0.009	0.002	0.006	0.004	0.019	0.01	0.006	0.011	0.012	0.023	0.015	0.009	4.959	12.225	4.909
5.004	-12.012	3.335	5.022	11.975	4.966	-12.018	3.298	5.063	11.743	4.925	-12	3.272	0.003	0.002	0.008	0.007	0.002	0.006	0.005	0.018	0.008	0.005	0.012	0.013	0.025	0.012	0.008	4.923	12.181	4.916
4.995	-11.85	3.339	5.038	11.981	4.97	-11.843	3.321	5.084	11.756	4.938	-11.831	3.31	0.005	0.002	0.009	0.008	0.002	0.006	0.005	0.019	0.009	0.005	0.013	0.012	0.031	0.013	0.009	4.955	12.193	4.933
4.996	-12.006	3.336	5.039	11.993	4.964	-12.006	3.314	5.083	11.762	4.925	-11.993	3.298	0.005	0.002	0.008	0.008	0.001	0.006	0.005	0.02	0.008	0.005	0.012	0.012	0.025	0.01	0.006	4.947	12.206	4.918
4.975	-12	3.355	5.049	12.012	4.951	-11.993	3.339	5.098	11.793	4.921	-11.981	3.329	0.003	0.002	0.007	0.008	0.002	0.006	0.006	0.016	0.009	0.005	0.01	0.014	0.021	0.011	0.005	4.968	12.231	4.918
4.978	-11.975	3.339	5.046	12.012	4.951	-11.975	3.317	5.093	11.781	4.918	-11.962	3.301	0.004	0.002	0.008	0.008	0.001	0.006	0.004	0.018	0.01	0.006	0.012	0.012	0.025	0.014	0.011	4.959	12.225	4.913
4.975	-11.993	3.336	5.039	12	4.949	-11.993	3.318	5.083	11.775	4.916	-11.981	3.307	0.005	0.002	0.008	0.009	0.001	0.006	0.004	0.018	0.009	0.006	0.012	0.013	0.026	0.018	0.008	4.951	12.218	4.912
4.991	-12	3.345	5.032	11.993	4.956	-12	3.31	5.089	11.768	4.927	-11.981	3.291	0.004	0.002	0.008	0.007	0.002	0.007	0.005	0.021	0.01	0.005	0.013	0.012	0.025	0.012	0.009	4.949	12.212	4.923
4.981	-12.006	3.336	5.043	12.012	4.958	-12.006	3.321	5.092	11.787	4.928	-11.987	3.311	0.005	0.003	0.008	0.008	0.002	0.006	0.004	0.016	0.009	0.005	0.011	0.012	0.025	0.012	0.008	4.958	12.231	4.924
4.985	-12.006	3.358	5.013	11.956	4.954	-12	3.329	5.058	11.731	4.918	-11.987	3.291	0.006	0.003	0.009	0.008	0.002	0.009	0.005	0.017	0.009	0.004	0.012	0.012	0.028	0.013	0.007	4.922	12.168	4.911
4.958	-11.993	3.356	5.063	12.05	4.933	-11.993	3.339	5.108	11.825	4.901	-11.975	3.328	0.003	0.002	0.007	0.009	0.002	0.007	0.006	0.014	0.01	0.004	0.011	0.013	0.021	0.012	0.006	4.979	12.268	4.896
4.927	-11.981	3.347	5.006	11.95	4.884	-11.987	3.321	5.053	11.718	4.82	-11.975	3.302	0.004	0.002	0.008	0.008	0.001	0.007	0.006	0.016	0.009	0.004	0.012	0.01	0.022	0.012	0.005	4.913	12.162	4.81
5.008	-12	3.351	5.051	12.037	4.982	-11.993	3.335	5.097	11.812	4.95	-11.987	3.323	0.004	0.002	0.008	0.008	0.002	0.007	0.006	0.015	0.008	0.005	0.011	0.01	0.025	0.013	0.005	4.964	12.262	4.945
4.948	-11.818	3.349	5.004	11.937	4.906	-11.825	3.323	5.051	11.706	4.861	-11.812	3.306	0.003	0.002	0.008	0.007	0.002	0.007	0.005	0.015	0.009	0.005	0.011	0.011	0.025	0.013	0.008	4.905	12.15	4.855
4.978	-11.981	3.343	5.064	12.056	4.951	-11.981	3.325	5.113	11.825	4.919	-11.968	3.313	0.005	0.004	0.006	0.008	0.003	0.006	0.005	0.014	0.009	0.004	0.01	0.013	0.02	0.015	0.006	4.975	12.281	4.914
4.967	-11.981	3.346	4.986	11.918	4.91	-11.987	3.312	5.042	11.668	4.913	-11.975	3.297	0.004	0.003	0.006	0.007	0.001	0.007	0.006	0.014	0.008	0.004	0.011	0.013	0.022	0.01	0.004	4.903	12.125	4.906
4.995	-12.012	3.354	5.062	12.037	4.97	-12.012	3.338	5.106	11.793	4.937	-11.993	3.325	0.004	0.002	0.007	0.008	0.002	0.007	0.006	0.016	0.009	0.005	0.011	0.014	0.02	0.012	0.008	4.976	12.243	4.933
4.978	-11.918	3.335	5.07	11.962	4.949	-11.9	3.311	5.114	11.768	4.911	-11.881	3.294	0.004	0.002	0.01	0.008	0.002	0.007	0.006	0.022	0.014	0.005	0.014	0.012	0.029	0.012	0.008	4.982	12.187	4.907
4.986	-12.006	3.349	5.017	11.95	4.962	-12	3.333	5.065	11.725	4.931	-11.987	3.322	0.004	0.002	0.008	0.008	0.003	0.007	0.006	0.018	0.009	0.005	0.013	0.014	0.022	0.015	0.006	4.936	12.162	4.927
4.983	-11.843	3.36	5.059	12.081	4.953	-11.843	3.34	5.109	11.843	4.913	-11.831	3.326	0.003	0.002	0.008	0.007	0.002	0.006	0.006	0.018	0.009	0.005	0.01	0.013	0.026	0.013	0.008	4.97	12.293	4.908
4.958	-11.993	3.356	5.063	12.05	4.933	-11.993	3.339	5.108	11.825	4.901	-11.975	3.328	0.003	0.002	0.007	0.009	0.002	0.007	0.006	0.014	0.01	0.004	0.011	0.013	0.021	0.012	0.006	4.979	12.268	4.896
5.003	-12.018	3.341	5.055	12.031	4.975	-12.012	3.311	5.093	11.8	4.88	-12.006	3.298	0.003	0.002	0.007	0.007	0.001	0.008	0.007	0.016	0.009	0.005	0.013	0.015	0.024	0.013	0.008	4.958	12.243	4.886
4.978	-12.006	3.35	5.04	12.012	4.95	-12.012	3.33	5.086	11.781	4.916	-12	3.318	0.003	0.003	0.008	0.008	0.002	0.007	0.006	0.018	0.009	0.004	0.011	0.012	0.029	0.011	0.006	4.949	12.237	4.911
5.01	-11.993	3.348	5.023	11.968	4.977	-11.993	3.325	5.067	11.743	4.938	-11.981	3.313	0.004	0.002	0.008	0.007	0.002	0.007	0.005	0.016	0.011	0.005	0.012	0.014	0.03	0.017	0.008	4.934	12.181	4.928
4.98	-12	3.343	5.062	12.056	4.954	-12	3.325	5.11	11.831	4.921	-11.987	3.312	0.004	0.003	0.008	0.009	0.002	0.007	0.007	0.016	0.01	0.004	0.011	0.013	0.023	0.018	0.008	4.975	12.275	4.916
4.933	-11.831	3.326	5.053	12.025	4.903	-11.831	3.306	5.102	11.787	4.862	-11.818	3.293	0.004	0.003	0.007	0.008	0.002	0.007	0.007	0.015	0.009	0.005	0.014	0.014	0.026	0.011	0.008	4.96	12.237	4.858
4.987	-11.975	3.344	5.051	12.037	4.96	-11.975	3.325	5.098	11.806	4.926	-11.962	3.311	0.003	0.003	0.008	0.008	0.001	0.005	0.007	0.015	0.008	0.005	0.011	0.014	0.022	0.011	0.009	4.963	12.25	4.921
4.968	-12.006	3.348	5.026	11.968	4.937	-12.006	3.326	5.071	11.743	4.897	-11.993	3.311	0.004	0.003	0.007	0.008	0.002	0.007	0.006	0.015	0.01	0.004	0.012	0.014	0.023	0.012	0.005	4.937	12.187	4.892
4.982	-11.987	3.341	5.037	12.006	4.956	-11.987	3.323	5.083	11.787	4.923	-11.968	3.312	0.004	0.003	0.006	0.008	0.001	0.005	0.005	0.015	0.009	0.004	0.01	0.012	0.019	0.013	0.004	4.951	12.225	4.918
4.982	-11.987	3.341	5.037	12.006	4.956	-11.987	3.323	5.083	11.787	4.923	-11.968	3.312	0.004	0.003	0.006	0.008	0.001	0.005	0.005	0.015	0.009	0.004	0.01	0.012	0.019	0.013	0.004	4.951	12.225	4.918
4.983	-11.993	3.351	5.01	11.943	4.952	-11.993	3.33	5.055	11.718	4.915	-11.981	3.315	0.004	0.002	0.008	0.007	0.002	0.007	0.005	0.016	0.009	0.004	0.011	0.012	0.024	0.011	0.007	4.917	12.156	4.909
4.983	-11.975	3.341	5.023	11.95	4.956	-11.975	3.323	5.068	11.725	4.924	-11.956	3.311	0.003	0.003	0.008	0.01	0.002	0.008	0.007	0.017	0.013	0.005	0.016	0.015	0.026	0.017	0.011	4.937	12.168	4.919
5.005	-12.006	3.328	5.028	11.993	4.97	-12.006	3.304	5.077	11.762	4.929	-12	3.288	0.004	0.002	0.007	0.008	0.002	0.007	0.005	0.017	0.009	0.005	0.01	0.011	0.022	0.011	0.007	4.933	12.206	4.923
4.985	-11.993	3.351	5.015	11.937	4.959	-11.993	3.333	5.06	11.712	4.927	-11.981	3.322	0.004	0.003	0.008	0.008	0.002	0.006	0.005	0.017	0.01	0.005	0.011	0.012	0.022	0.012	0.008	4.93	12.156	4.922
4.977	-12.006	3.336	5.002	11.95	4.943	-12.006	3.314	5.05	11.718	4.9	-11.987	3.299	0.004	0.002	0.008	0.007	0.002	0.008	0.007	0.015	0.009	0.004	0.015	0.015	0.026	0.013	0.005	4.903	12.168	4.895
4.999	-11.993	3.35	5.015	11.937	4.973	-11.993	3.331	5.061	11.712	4.94	-11.981	3.318	0.003	0.003	0.01	0.008	0.002	0.007	0.004	0.017	0.008	0.005	0.013	0.012	0.032	0.01	0.009	4.929	12.156	4.935
4.99	-12.006	3.355	5.043	12.006	4.965	-12.006	3.338	5.09	11.781	4.933	-11.987	3.326	0.005	0.003	0.007	0.009	0.002	0.007	0.006	0.016	0.012	0.005	0.014	0.014	0.024	0.016	0.007	4.961	12.225	4.928
4.978	-11.975	3.342	5.03	12.012	4.945	-11.975	3.32	5.078	11.781	4.903	-11.962	3.305	0.004	0.004	0.008	0.007	0.001	0.007	0.007	0.016	0.01	0.005	0.011	0.012	0.02	0.012	0.006	4.935	12.225	4.898
4.989	-12.006	3.339	5.011	11.931	4.962	-12.006	3.321	5.063	11.712	4.933	-11.987	3.313	0.005	0.003	0.007	0.009	0.002	0.007	0.006	0.016	0.01	0.004	0.013	0.014	0.023	0.013	0.006	4.941	12.15	4.933
4.988	-11.831	3.355	5.053	12.025	4.957	-11.831	3.333	5.1	11.8	4.92	-11.818	3.32	0.006	0.002	0.007	0.017	0.009	0.006	0.005	0.015	0.009	0.004	0.012	0.012	0.021	0.01	0.006	4.961	12.237	4.914
4.964	-11.968	3.331	5.026	11.968	4.936	-11.975	3.311	5.072	11.737	4.903	-11.962	3.298	0.004	0.003	0.008	0.008	0.002	0.006	0.007	0.018	0.009	0.005	0.012	0.013	0.025	0.013	0.012	4.94	12.181	4.898
4.959	-11.987	3.333	5.015	11.975	4.905	-12	3.304	5.06	11.743	4.821	-11.987	3.283	0.004	0.002	0.009	0.007	0.002	0.007	0.007	0.015	0.008	0.005	0.012	0.014	0.024	0.011	0.008	4.914	12.187	4.823
5.037	-11.868	3.343	5.029	11.968	5.01	-11.868	3.325	5.076	11.737	4.978	-11.856	3.312	0.005	0.002	0.009	0.008	0.002	0.007	0.005	0.018	0.009	0.003	0.01	0.013	0.026	0.013	0.005	4.941	12.187	4.973
4.976	-12.006	3.339	5.024	12	4.94	-12.012	3.301	5.067	11.762	4.899	-12.006	3.274	0.004	0.003	0.009	0.008	0.002	0.01	0.009	0.017	0.009	0.004	0.014	0.014	0.027	0.015	0.006	4.925	12.206	4.891
4.983	-11.987	3.343	5.052	12.025	4.957	-11.987	3.326	5.1	11.787	4.925	-11.968	3.314	0.003	0.002	0.008	0.008	0.001	0.006	0.005	0.016	0.008	0.004	0.01	0.011	0.022	0.014	0.006	4.968	12.237	4.921
4.973	-11.956	3.341	5.01	11.95	4.948	-11.95	3.32	5.067	11.712	4.914	-11.931	3.308	0.004	0.004	0.014	0.009	0.005	0.007	0.007	0.016	0.01	0.006	0.012	0.013	0.026	0.013	0.009	4.919	12.156	4.91
5.250	-10.800	3.465	5.25	12.600	5.250	-10.800	3.465	5.25	12.600	5.250	-10.800	3.465	0.070	0.120	0.100	0.250	0.050	0.070	0.120	0.100	0.250	0.050	0.070	0.120	0.100	0.250	0.050	5.25	12.600	5.250
4.750	-13.200	3.135	4.75	11.400	4.750	-13.200	3.135	4.75	11.400	4.750	-13.200	3.135																4.75	11.400	4.750
4.927	-12.018	3.326	4.986	11.918	4.884	-12.018	3.298	5.042	11.668	4.820	-12.006	3.272	0.003	0.002	0.006	0.007	0.001	0.005	0.004	0.014	0.008	0.003	0.010	0.010	0.019	0.010	0.004	4.903	12.125	4.810
5.037	-11.818	3.360	5.070	12.081	5.010	-11.825	3.340	5.114	11.843	4.978	-11.812	3.329	0.006	0.004	0.014	0.017	0.009	0.010	0.009	0.022	0.014	0.006	0.016	0.015	0.032	0.018	0.012	4.982	12.293	4.973
4.981	-11.974	3.343	5.034	11.992	4.951	-11.974	3.322	5.081	11.764	4.914	-11.960	3.308	0.004	0.002	0.008	0.008	0.002	0.007	0.006	0.017	0.009	0.005	0.012	0.013	0.024	0.013	0.007	4.946	12.207	4.909
0.020	0.053	0.008	0.019	0.038	0.023	0.053	0.011	0.019	0.038	0.028	0.053	0.013	0.001	0.001	0.001	0.001	0.001	0.001	0.001	0.002	0.001	0.001	0.001	0.001	0.003	0.002	0.002	0.021	0.039	0.028
4.26	7.56	6.49	4.33	5.23	3.70	7.49	5.11	4.46	5.21	2.95	7.51	4.08	28.62	63.79	24.16	54.29	13.20	23.32	35.81	15.48	66.39	23.35	13.99	30.21	8.39	38.93	7.66	3.96	5.09	2.98
0.08	0.02	0.26	0.14	0.01	0.20	0.02	0.13	0.33	0.39	0.34	0.03	0.05																0.22	0.35	0.36
3.94	7.39	4.78	3.73	5.16	2.97	7.33	4.42	3.01	3.16	1.93	7.26	3.89	28.62	63.79	24.16	54.29	13.20	23.32	35.81	15.48	66.39	23.35	13.99	30.21	8.39	38.93	7.66	3.10	3.33	1.90
OK	**OK**	**OK**	**OK**	**OK**	**OK**	**OK**	**OK**	**OK**	**OK**	**OK**	**OK**	**OK**	**OK**	**OK**	**OK**	**OK**	**OK**	**OK**	**OK**	**OK**	**OK**	**OK**	**OK**	**OK**	**OK**	**OK**	**OK**	**OK**	**OK**	**OK**

G(All1)		11.COMBINE REG(All1)					11.COMBINE REG(All1)					11.COMBINE REG(All1)					11.COMBINE REG(All1)					11.COMBINE REG(All1)					12.COMBINE REG(ALL2)			
'Hz +5Vs/2A /10A		Vin:115V Fin60Hz Io:+5V/11A +12V/3A +5Vs/1A -12V/0.5A +3.3V/5A					Vin:135V Fin60Hz Io:+5V/1A +12V/2A +5Vs/0.5A -12V/0.1A +3.3V/0A					Vin:90V Fin47Hz Io:+5V/22A +12V/7A +5Vs/2A -12V/1A +3.3V/10A					Vin:115V Fin60Hz Io:+5V/11A +12V/3A +5Vs/1A -12V/0.5A +3.3V/5A					Vin:135V Fin60Hz Io:+5V/1A +12V/2A +5Vs/0.5A -12V/0.1A +3.3V/0A					Vin:90V Fin47Hz Io:+5V/2A +12V/14A +5Vs/0.5A -12V/0.1A +3.3V/18A			
Vdc-12V	Vdc+3.3V	Vdc+5V	Vdc+12V	Vdc+5Vs	Vdc-12V	Vdc+3.3V	Vdc+5V	Vdc+12V	Vdc+5Vs	Vdc-12V	Vdc+3.3V	Vpp+5V	Vpp+12V	Vpp+5Vs	Vpp-12V	Vpp+3.3V	Vpp+5V	Vpp+12V	Vpp+5Vs	Vpp-12V	Vpp+3.3V	Vpp+5V	Vpp+12V	Vpp+5Vs	Vpp-12V	Vpp+3.3V	Vdc+5V	Vdc+12V	Vdc+5Vs	Vdc-12V
-11.981	3.316	5.013	12.062	4.93	-11.987	3.334	5.091	11.856	4.954	--11.993	3.348	0.015	0.013	0.027	0.012	0.008	0.005	0.004	0.015	0.007	0.005	0.004	0.002	0.008	0.009	0.002	5.121	11.606	4.932	-12.012
-11.981	3.298	5.021	12.081	4.943	-11.981	3.322	5.106	11.887	4.979	--11.981	3.341	0.014	0.014	0.022	0.012	0.006	0.005	0.003	0.015	0.01	0.005	0.004	0.002	0.009	0.009	0.002	5.126	11.631	4.948	-12.012
-12.006	3.292	5.024	12.087	4.995	-12.012	3.313	5.105	11.887	5.02	--12.018	3.33	0.014	0.014	0.024	0.018	0.01	0.006	0.004	0.016	0.009	0.004	0.005	0.002	0.009	0.01	0.002	5.129	11.637	4.994	-12.037
-11.962	3.31	5.015	12.075	4.958	-11.968	3.333	5.098	11.887	4.988	--11.968	3.351	0.013	0.013	0.034	0.016	0.011	0.005	0.004	0.017	0.008	0.004	0.004	0.002	0.008	0.008	0.001	5.123	11.618	4.96	-11.993
-11.993	3.299	5.026	12.087	4.95	-12	3.318	5.107	11.887	4.975	-12	3.334	0.012	0.013	0.025	0.013	0.01	0.005	0.004	0.017	0.011	0.005	0.004	0.002	0.008	0.009	0.002	5.131	11.643	4.95	-12.025
-12.012	3.272	5.008	12.062	4.973	-12.012	3.311	5.101	11.875	5.011	-12.006	3.341	0.014	0.014	0.025	0.013	0.01	0.006	0.004	0.017	0.008	0.004	0.004	0.002	0.008	0.007	0.002	5.106	11.612	4.965	-12.05
-11.837	3.308	5.02	12.068	4.973	-11.843	3.327	5.099	11.875	4.998	-11.843	3.342	0.013	0.013	0.033	0.016	0.01	0.005	0.004	0.017	0.009	0.006	0.004	0.002	0.008	0.008	0.001	5.126	11.618	4.974	-11.868
-12.006	3.296	5.023	12.081	4.968	-12.006	3.321	5.112	11.887	5	-12.006	3.34	0.014	0.013	0.026	0.01	0.006	0.006	0.004	0.016	0.007	0.005	0.004	0.003	0.009	0.008	0.001	5.127	11.631	4.97	-12.037
-11.987	3.328	5.032	12.1	4.955	-12	3.344	5.111	11.906	4.978	-12	3.357	0.011	0.014	0.022	0.011	0.007	0.005	0.005	0.015	0.009	0.005	0.004	0.002	0.008	0.008	0.002	5.139	11.656	4.958	-12.018
-11.968	3.301	5.028	12.1	4.955	-11.968	3.324	5.11	11.906	4.981	-11.975	3.342	0.014	0.014	0.026	0.013	0.009	0.005	0.003	0.016	0.008	0.005	0.003	0.002	0.009	0.009	0.001	5.136	11.643	4.956	-12
-11.987	3.305	5.021	12.081	4.954	-11.993	3.325	5.103	11.887	4.98	-11.993	3.34	0.013	0.012	0.025	0.013	0.009	0.005	0.003	0.018	0.009	0.003	0.004	0.002	0.008	0.008	0.001	5.125	11.637	4.954	-12.018
-11.993	3.301	5.025	12.081	4.97	-12	3.328	5.112	11.893	4.999	-12.006	3.35	0.013	0.012	0.024	0.014	0.008	0.006	0.004	0.021	0.009	0.004	0.004	0.002	0.009	0.008	0.002	5.133	11.631	4.973	-12.031
-11.993	3.31	5.024	12.1	4.961	-12	3.326	5.103	11.9	4.984	-12.012	3.339	0.013	0.013	0.025	0.012	0.008	0.006	0.004	0.015	0.01	0.005	0.004	0.003	0.009	0.008	0.002	5.133	11.65	4.964	-12.025
-12	3.3	4.999	12.043	4.959	-12	3.335	5.088	11.85	4.99	-12	3.362	0.015	0.013	0.024	0.014	0.008	0.007	0.003	0.016	0.008	0.004	0.005	0.002	0.008	0.008	0.001	5.1	11.6	4.956	-12.037
-11.981	3.325	5.046	12.137	4.937	-11.987	3.345	5.126	11.937	4.962	-11.993	3.36	0.012	0.013	0.021	0.018	0.005	0.005	0.006	0.013	0.008	0.004	0.004	0.002	0.007	0.009	0.001	5.149	11.681	4.938	-12.018
-11.981	3.302	4.993	12.037	4.893	-11.981	3.332	5.08	11.837	4.936	-11.981	3.352	0.013	0.012	0.022	0.015	0.006	0.006	0.005	0.014	0.008	0.004	0.003	0.002	0.008	0.008	0.001	5.101	11.581	4.908	-12.012
-11.993	3.321	5.033	12.125	4.986	-12	3.34	5.115	11.918	5.011	-12	3.355	0.014	0.012	0.023	0.017	0.005	0.005	0.004	0.015	0.009	0.005	0.004	0.002	0.008	0.008	0.002	5.138	11.675	4.987	-12.025
-11.825	3.304	4.988	12.031	4.913	-11.818	3.332	5.082	11.843	4.949	-11.818	3.355	0.013	0.013	0.025	0.014	0.008	0.006	0.003	0.016	0.008	0.005	0.003	0.002	0.008	0.007	0.002	5.097	11.568	4.915	-11.85
-11.981	3.31	5.046	12.15	4.955	-11.981	3.33	5.13	11.95	4.981	-11.981	3.346	0.012	0.014	0.022	0.014	0.006	0.005	0.005	0.014	0.009	0.004	0.005	0.006	0.007	0.008	0.002	5.155	11.675	4.955	-12.006
-11.981	3.298	4.983	12.006	4.962	-11.981	3.328	5.078	11.825	4.997	-11.981	3.353	0.014	0.014	0.02	0.011	0.004	0.006	0.005	0.015	0.008	0.004	0.004	0.004	0.008	0.007	0.001	5.086	11.531	4.961	-12.018
-12	3.323	5.043	12.112	4.973	-12.006	3.342	5.123	11.925	4.998	-12.012	3.357	0.014	0.015	0.023	0.013	0.009	0.006	0.004	0.014	0.01	0.005	0.004	0.002	0.008	0.008	0.001	5.147	11.65	4.975	-12.037
-11.881	3.296	5.058	12.043	4.954	-11.9	3.32	5.142	11.85	4.982	-11.918	3.338	0.017	0.014	0.029	0.013	0.009	0.006	0.006	0.018	0.012	0.006	0.005	0.002	0.01	0.01	0.002	5.156	11.637	4.956	-11.943
-11.993	3.32	5	12.037	4.966	-12	3.338	5.078	11.843	4.989	-12.006	3.351	0.014	0.014	0.024	0.013	0.007	0.006	0.004	0.015	0.007	0.004	0.004	0.002	0.008	0.007	0.002	5.106	11.587	4.968	-12.031
-11.837	3.323	5.042	12.162	4.957	-11.843	3.345	5.128	11.962	4.987	-11.843	3.363	0.012	0.013	0.026	0.014	0.007	0.005	0.004	0.016	0.008	0.005	0.003	0.003	0.007	0.007	0.001	5.153	11.7	4.959	-11.875
-11.981	3.325	5.046	12.137	4.937	-11.987	3.345	5.126	11.937	4.962	-11.993	3.36	0.012	0.013	0.021	0.018	0.005	0.005	0.006	0.013	0.008	0.004	0.004	0.002	0.007	0.009	0.001	5.149	11.681	4.938	-12.018
-12.012	3.3	5.034	12.112	4.956	-12.012	3.325	5.125	11.925	4.995	-12.012	3.344	0.016	0.016	0.023	0.013	0.009	0.006	0.005	0.017	0.008	0.005	0.003	0.002	0.007	0.007	0.001	5.141	11.668	4.965	-12.043
-12.006	3.315	5.023	12.093	4.955	-12.006	3.336	5.11	11.893	4.981	-12.006	3.353	0.014	0.013	0.026	0.015	0.007	0.006	0.005	0.018	0.009	0.005	0.004	0.003	0.008	0.009	0.002	5.13	11.637	4.955	-12.031
-11.993	3.308	5.009	12.05	4.983	-11.993	3.333	5.092	11.856	5.015	-11.993	3.352	0.013	0.013	0.028	0.014	0.007	0.006	0.004	0.016	0.009	0.005	0.004	0.002	0.009	0.008	0.002	5.109	11.612	4.985	-12.025
-11.993	3.31	5.045	12.143	4.958	-11.993	3.33	5.128	11.943	4.983	-12	3.346	0.014	0.015	0.024	0.013	0.008	0.006	0.005	0.015	0.009	0.004	0.003	0.002	0.008	0.009	0.002	5.152	11.693	4.958	-12.025
-11.825	3.291	5.035	12.112	4.907	-11.831	3.313	5.124	11.918	4.937	-11.831	3.33	0.016	0.016	0.027	0.012	0.01	0.006	0.005	0.016	0.009	0.004	0.004	0.003	0.007	0.008	0.002	5.145	11.65	4.911	-11.856
-11.968	3.308	5.035	12.125	4.964	-11.975	3.33	5.119	11.931	4.991	-11.975	3.347	0.011	0.017	0.022	0.011	0.007	0.005	0.006	0.014	0.007	0.004	0.003	0.003	0.008	0.008	0.002	5.139	11.662	4.963	-12
-12.006	3.31	5.009	12.062	4.941	-12.006	3.333	5.095	11.868	4.972	-12.006	3.351	0.014	0.015	0.022	0.014	0.005	0.006	0.004	0.014	0.01	0.004	0.004	0.002	0.007	0.007	0.001	5.113	11.612	4.945	-12.031
-11.981	3.31	5.021	12.087	4.96	-11.981	3.33	5.103	11.887	4.985	-11.987	3.345	0.011	0.013	0.021	0.016	0.004	0.005	0.004	0.014	0.007	0.003	0.004	0.002	0.006	0.007	0.001	5.124	11.65	4.96	-12.006
-11.981	3.31	5.021	12.087	4.96	-11.981	3.33	5.103	11.887	4.985	-11.987	3.345	0.011	0.013	0.021	0.016	0.004	0.005	0.004	0.014	0.007	0.003	0.004	0.002	0.006	0.007	0.001	5.124	11.65	4.96	-12.006
-11.993	3.313	4.993	12.025	4.957	-11.993	3.336	5.08	11.825	4.987	-11.993	3.355	0.014	0.013	0.022	0.017	0.009	0.005	0.004	0.016	0.008	0.006	0.004	0.003	0.008	0.007	0.002	5.099	11.581	4.958	-12.018
-11.968	3.308	5.006	12.037	4.961	-11.975	3.328	5.089	11.85	4.986	-11.968	3.345	0.019	0.016	0.025	0.019	0.01	0.007	0.005	0.015	0.01	0.005	0.004	0.003	0.007	0.01	0.002	5.11	11.581	4.96	-12
-12.012	3.285	5.016	12.087	4.978	-12.006	3.312	5.107	11.893	5.011	-12	3.333	0.012	0.012	0.024	0.016	0.008	0.006	0.004	0.014	0.009	0.005	0.004	0.002	0.007	0.009	0.002	5.123	11.612	4.977	-12.037
-11.987	3.318	4.998	12.018	4.963	-11.987	3.338	5.078	11.818	4.988	-11.993	3.354	0.015	0.013	0.021	0.017	0.009	0.006	0.004	0.016	0.008	0.004	0.004	0.002	0.007	0.007	0.001	5.101	11.575	4.963	-12.018
-12	3.296	4.984	12.037	4.948	-12	3.32	5.076	11.837	4.98	-12	3.34	0.017	0.016	0.024	0.011	0.006	0.006	0.005	0.015	0.008	0.004	0.004	0.003	0.008	0.008	0.001	5.094	11.581	4.951	-12.031
-11.987	3.316	4.998	12.018	4.976	-11.993	3.336	5.08	11.825	5.003	-11.993	3.353	0.014	0.014	0.034	0.014	0.008	0.006	0.004	0.017	0.007	0.005	0.004	0.002	0.009	0.008	0.002	5.103	11.575	4.976	-12.018
-12	3.324	5.026	12.087	4.968	-12	3.343	5.103	11.887	4.992	-12.006	3.358	0.016	0.014	0.024	0.018	0.008	0.006	0.005	0.017	0.01	0.005	0.005	0.002	0.007	0.009	0.002	5.131	11.65	4.97	-12.031
-11.975	3.301	5.013	12.1	4.95	-11.975	3.326	5.106	11.9	4.983	-11.975	3.346	0.013	0.014	0.02	0.016	0.007	0.006	0.007	0.014	0.007	0.005	0.004	0.004	0.007	0.007	0.001	5.122	11.643	4.951	-12.006
-11.993	3.315	5.002	12.018	4.971	-12	3.331	5.079	11.831	4.993	-12.006	3.343	0.016	0.014	0.024	0.013	0.006	0.006	0.004	0.014	0.009	0.005	0.004	0.003	0.007	0.009	0.002	5.109	11.581	4.974	-12.025
-11.825	3.318	5.035	12.112	4.961	-11.831	3.34	5.121	11.925	4.991	-11.831	3.358	0.013	0.013	0.021	0.01	0.006	0.006	0.005	0.015	0.008	0.005	0.004	0.002	0.007	0.008	0.002	5.142	11.662	4.962	-11.862
-11.975	3.295	5.01	12.05	4.941	-11.975	3.317	5.091	11.856	4.968	-11.975	3.335	0.013	0.014	0.028	0.017	0.01	0.006	0.005	0.016	0.008	0.004	0.004	0.002	0.008	0.007	0.002	5.113	11.606	4.94	-12
-12	3.282	5	12.068	4.922	-11.993	3.314	5.1	11.881	4.978	-11.987	3.34	0.015	0.015	0.025	0.013	0.008	0.007	0.005	0.016	0.007	0.005	0.003	0.003	0.008	0.008	0.002	5.106	11.606	4.938	-12.025
-11.868	3.31	5.011	12.056	5.015	-11.868	3.33	5.095	11.862	5.04	-11.868	3.346	0.013	0.013	0.023	0.013	0.005	0.005	0.004	0.016	0.009	0.004	0.003	0.002	0.009	0.008	0.002	5.12	11.6	5.015	-11.893
-12.018	3.277	5.01	12.087	4.947	-12.006	3.315	5.104	11.9	4.983	-12	3.345	0.017	0.015	0.027	0.013	0.007	0.008	0.009	0.015	0.008	0.004	0.004	0.003	0.008	0.007	0.001	5.111	11.625	4.94	-12.043
-11.981	3.312	5.034	12.112	4.961	-11.981	3.331	5.115	11.912	4.986	-11.987	3.347	0.012	0.013	0.022	0.013	0.005	0.005	0.005	0.017	0.009	0.004	0.003	0.002	0.009	0.008	0.001	5.14	11.656	4.962	-12.006
-11.937	3.308	4.995	12.037	4.952	-11.95	3.328	5.085	11.85	4.977	-11.956	3.345	0.013	0.013	0.028	0.013	0.008	0.007	0.007	0.023	0.01	0.005	0.005	0.004	0.013	0.009	0.005	5.115	11.581	4.953	-11.975
-10.800	3.465	5.25	12.600	5.250	-10.800	3.465	5.25	12.600	5.250	-10.800	3.465	0.070	0.120	0.100	0.250	0.050	0.070	0.120	0.100	0.250	0.050	0.070	0.120	0.100	0.250	0.050	5.25	12.600	5.250	-10.800
-13.200	3.135	4.75	11.400	4.750	-13.200	3.135	4.75	11.400	4.750	-13.200	3.135																4.75	11.400	4.750	-13.200
-12.018	3.272	4.983	12.006	4.893	-12.012	3.311	5.076	11.818	4.936	-12.012	3.330	0.011	0.012	0.020	0.010	0.004	0.005	0.003	0.013	0.007	0.003	0.003	0.002	0.006	0.007	0.001	5.086	11.531	4.908	-12.050
-11.825	3.328	5.058	12.162	5.015	-11.818	3.345	5.142	11.962	5.040	-11.818	3.363	0.019	0.017	0.034	0.019	0.011	0.008	0.009	0.023	0.012	0.006	0.005	0.006	0.013	0.010	0.005	5.156	11.700	5.015	-11.850
-11.968	3.306	5.018	12.078	4.957	-11.971	3.329	5.103	11.883	4.986	-11.972	3.347	0.014	0.014	0.024	0.014	0.007	0.006	0.005	0.016	0.009	0.005	0.004	0.002	0.008	0.008	0.002	5.124	11.627	4.958	-12.000
0.054	0.012	0.018	0.038	0.021	0.053	0.009	0.017	0.036	0.019	0.055	0.008	0.002	0.001	0.003	0.002	0.002	0.001	0.001	0.002	0.001	0.001	0.001	0.001	0.001	0.001	0.001	0.018	0.037	0.019	0.053
7.42	4.42	4.63	5.24	4.02	7.57	5.93	4.99	5.48	4.39	7.29	6.69	10.88	30.42	7.77	34.84	7.70	30.85	34.15	15.49	71.31	21.45	38.94	49.82	27.50	91.96	23.27	4.65	5.43	4.34	7.56
0.03	0.04	0.07	0.13	0.17	0.02	0.18	0.41	0.19	0.06	0.02	0.29																0.50	0.62	0.17	0.00
7.23	4.24	4.29	4.56	3.32	7.38	4.88	2.93	4.42	4.14	7.12	4.77	10.88	30.42	7.77	34.84	7.70	30.85	34.15	15.49	71.31	21.45	38.94	49.82	27.50	91.96	23.27	2.34	2.05	3.62	7.56
OK	**OK**	**OK**	**OK**	**OK**	**OK**	**OK**	**OK**	**OK**	**OK**	**OK**	**OK**	**OK**	**OK**	**OK**	**OK**	**OK**	**OK**	**OK**	**OK**	**OK**	**OK**	**OK**	**OK**	**OK**	**OK**	**OK**	**OK**	**OK**	**OK**	**OK**

	12.COMBINE REG(ALL2)					12.COMBINE REG(ALL2)					12.COMBINE REG(ALL2)					12.COMBINE REG(ALL2)					12.COMBINE REG(ALL2)					13.CYCLE DROPOUT				
	Vin:115V Fin60Hz Io:+5V/6A +12V/7A +5Vs/1A -12V/1A +3.3V/9A					Vin:135V Fin60Hz Io:+5V/2A +12V/2A +5Vs/0.5A -12V/0.1A +3.3V/0.1A					Vin:90V Fin47Hz Io:+5V/2A +12V/14A +5Vs/0.5A -12V/0.1A +3.3V/18A					Vin:115V Fin60Hz Io:+5V/6A +12V/7A +5Vs/1A -12V/1A +3.3V/9A					Vin:135V Fin60Hz Io:+5V/2A +12V/2A +5Vs/0.5A -12V/0.1A +3.3V/0.1A					Vin:115V Fin60Hz Io:+5V/5A +12V/16A +5Vs/2A -12V/0.5A +3.3V/6A				
Vdc+3.3V	Vdc+5V	Vdc+12V	Vdc+5Vs	Vdc-12V	Vdc+3.3V	Vdc+5V	Vdc+12V	Vdc+5Vs	Vdc-12V	Vdc+3.3V	Vpp+5V	Vpp+12V	Vpp+5Vs	Vpp-12V	Vpp+3.3V	Vpp+5V	Vpp+12V	Vpp+5Vs	Vpp-12V	Vpp+3.3V	Vpp+5V	Vpp+12V	Vpp+5Vs	Vpp-12V	Vpp+3.3V	Vdc(H)_1	Vdc(H)_2	Vdc(H)_3	Vdc(H)_4	Vdc(H)_5
3.32	5.074	11.825	4.929	-11.968	3.331	5.082	11.887	4.953	-11.993	3.348	0.011	0.012	0.016	0.012	0.007	0.008	0.006	0.015	0.009	0.005	0.004	0.002	0.008	0.008	0.002	5.125	11.618	4.904	-12.006	3.328
3.302	5.082	11.843	4.94	-11.962	3.317	5.096	11.912	4.978	-11.981	3.34	0.01	0.012	0.015	0.014	0.005	0.007	0.005	0.016	0.011	0.006	0.003	0.003	0.009	0.008	0.002	5.131	11.65	4.896	-12	3.311
3.296	5.084	11.856	4.992	-11.993	3.31	5.096	11.918	5.02	-12.012	3.329	0.01	0.01	0.016	0.014	0.008	0.009	0.005	0.016	0.013	0.005	0.003	0.002	0.008	0.01	0.002	5.134	11.65	4.965	-12.025	3.305
3.315	5.076	11.837	4.956	-11.95	3.33	5.089	11.912	4.986	-11.975	3.35	0.01	0.011	0.02	0.011	0.008	0.007	0.005	0.021	0.009	0.006	0.003	0.002	0.008	0.008	0.002	5.126	11.637	4.926	-11.987	3.324
3.303	5.086	11.856	4.948	-11.975	3.315	5.098	11.918	4.973	-12	3.333	0.008	0.01	0.023	0.013	0.006	0.007	0.005	0.02	0.01	0.006	0.003	0.003	0.008	0.008	0.002	5.136	11.662	4.922	-12.012	3.311
3.275	5.067	11.831	4.97	-11.987	3.303	5.091	11.906	5.009	-12.006	3.34	0.01	0.011	0.015	0.012	0.006	0.008	0.005	0.017	0.009	0.006	0.003	0.002	0.008	0.006	0.002	5.113	11.631	4.937	-12.037	3.296
3.312	5.079	11.837	4.971	-11.818	3.324	5.09	11.906	4.997	-11.85	3.341	0.011	0.012	0.02	0.013	0.008	0.008	0.005	0.019	0.012	0.007	0.003	0.003	0.009	0.008	0.001	5.13	11.631	4.946	-11.862	3.32
3.3	5.083	11.843	4.966	-11.987	3.316	5.102	11.918	4.998	-12.006	3.339	0.01	0.012	0.016	0.01	0.005	0.008	0.005	0.017	0.01	0.005	0.004	0.002	0.009	0.007	0.002	5.13	11.643	4.933	-12.025	3.311
3.331	5.091	11.868	4.953	-11.975	3.341	5.102	11.931	4.977	-12.006	3.356	0.011	0.014	0.013	0.013	0.006	0.006	0.006	0.015	0.011	0.004	0.003	0.002	0.008	0.009	0.002	5.142	11.668	4.927	-12.012	3.337
3.303	5.088	11.862	4.953	-11.95	3.319	5.101	11.931	4.98	-11.975	3.341	0.01	0.011	0.019	0.013	0.007	0.008	0.005	0.017	0.01	0.005	0.004	0.002	0.007	0.009	0.002	5.138	11.65	4.925	-11.987	3.315
3.308	5.079	11.85	4.951	-11.968	3.321	5.094	11.918	4.978	-11.993	3.34	0.011	0.013	0.022	0.017	0.007	0.008	0.005	0.018	0.011	0.005	0.004	0.002	0.009	0.009	0.001	5.128	11.65	4.925	-12.006	3.316
3.298	5.086	11.85	4.968	-11.975	3.32	5.102	11.925	4.998	-12.006	3.349	0.01	0.013	0.021	0.016	0.006	0.009	0.006	0.021	0.011	0.007	0.004	0.002	0.008	0.007	0.002	5.135	11.65	4.936	-12.018	3.318
3.313	5.085	11.862	4.96	-11.981	3.323	5.094	11.931	4.984	-12.006	3.338	0.009	0.01	0.014	0.012	0.007	0.007	0.005	0.021	0.01	0.007	0.005	0.002	0.01	0.008	0.002	5.137	11.668	4.936	-12.018	3.32
3.295	5.058	11.812	4.956	-11.981	3.325	5.078	11.875	4.988	-12.006	3.361	0.012	0.013	0.015	0.012	0.006	0.01	0.006	0.02	0.01	0.006	0.005	0.002	0.008	0.008	0.002	5.105	11.612	4.93	-12.025	3.323
3.33	5.104	11.9	4.935	-11.962	3.341	5.118	11.968	4.961	-11.993	3.359	0.01	0.011	0.014	0.016	0.006	0.007	0.006	0.014	0.01	0.005	0.003	0.003	0.007	0.009	0.002	5.154	11.706	4.908	-12.006	3.337
3.31	5.053	11.8	4.894	-11.962	3.327	5.07	11.868	4.936	-11.981	3.351	0.009	0.01	0.015	0.011	0.004	0.007	0.007	0.015	0.011	0.005	0.003	0.003	0.008	0.008	0.001	5.103	11.6	4.843	-12	3.322
3.325	5.092	11.887	4.984	-11.975	3.336	5.105	11.95	5.01	-12	3.354	0.011	0.011	0.015	0.013	0.005	0.006	0.006	0.015	0.01	0.005	0.003	0.002	0.007	0.008	0.002	5.141	11.687	4.958	-12.012	3.333
3.308	5.051	11.793	4.911	-11.8	3.327	5.072	11.868	4.948	-11.825	3.353	0.009	0.012	0.015	0.014	0.009	0.007	0.006	0.015	0.009	0.006	0.004	0.002	0.008	0.007	0.002	5.099	11.575	4.872	-11.837	3.321
3.315	5.107	11.906	4.953	-11.962	3.327	5.12	11.975	4.98	-11.987	3.345	0.009	0.012	0.015	0.018	0.004	0.007	0.006	0.015	0.011	0.005	0.005	0.005	0.007	0.008	0.002	5.158	11.7	4.926	-12	3.323
3.3	5.043	11.768	4.96	-11.962	3.321	5.068	11.85	4.995	-11.981	3.351	0.009	0.012	0.015	0.012	0.005	0.009	0.006	0.016	0.011	0.003	0.003	0.003	0.007	0.007	0.001	5.091	11.543	4.922	-12	3.316
3.326	5.101	11.875	4.971	-11.987	3.339	5.113	11.95	4.997	-12.012	3.356	0.01	0.013	0.021	0.013	0.008	0.006	0.008	0.017	0.01	0.005	0.004	0.002	0.006	0.008	0.001	5.152	11.668	4.945	-12.025	3.335
3.296	5.108	11.837	4.952	-11.862	3.313	5.133	11.875	4.981	-11.918	3.338	0.011	0.012	0.022	0.012	0.008	0.009	0.009	0.021	0.013	0.006	0.004	0.002	0.01	0.009	0.002	5.157	11.65	4.922	-11.925	3.31
3.324	5.059	11.8	4.964	-11.981	3.335	5.07	11.868	4.988	-12.006	3.35	0.01	0.012	0.015	0.013	0.006	0.009	0.006	0.016	0.009	0.005	0.004	0.003	0.009	0.008	0.002	5.111	11.6	4.939	-12.012	3.331
3.328	5.104	11.925	4.955	-11.818	3.342	5.119	11.993	4.986	-11.85	3.362	0.01	0.011	0.024	0.012	0.006	0.008	0.006	0.017	0.012	0.006	0.003	0.002	0.007	0.007	0.002	5.156	11.712	4.921	-11.862	3.336
3.33	5.104	11.9	4.935	-11.962	3.341	5.118	11.968	4.961	-11.993	3.359	0.01	0.011	0.014	0.016	0.006	0.007	0.006	0.014	0.01	0.005	0.003	0.003	0.007	0.009	0.002	5.154	11.706	4.908	-12.006	3.337
3.305	5.094	11.881	4.953	-11.987	3.32	5.114	11.95	4.994	-12.012	3.343	0.011	0.014	0.021	0.014	0.007	0.01	0.008	0.017	0.011	0.006	0.003	0.002	0.006	0.007	0.001	5.143	11.681	4.906	-12.031	3.315
3.32	5.082	11.856	4.952	-11.987	3.333	5.1	11.925	4.98	-12.012	3.353	0.012	0.012	0.017	0.014	0.007	0.007	0.006	0.019	0.009	0.005	0.004	0.003	0.008	0.008	0.002	5.133	11.65	4.926	-12.025	3.327
3.315	5.066	11.825	4.981	-11.975	3.33	5.083	11.887	5.013	-11.993	3.351	0.01	0.013	0.019	0.016	0.008	0.007	0.006	0.016	0.011	0.007	0.004	0.002	0.009	0.007	0.002	5.112	11.625	4.946	-12.012	3.324
3.314	5.105	11.912	4.956	-11.975	3.326	5.119	11.975	4.983	-12	3.345	0.01	0.012	0.02	0.013	0.005	0.008	0.006	0.02	0.012	0.006	0.004	0.002	0.007	0.008	0.002	5.156	11.706	4.929	-12.018	3.323
3.295	5.096	11.868	4.905	-11.806	3.308	5.113	11.95	4.936	-11.837	3.328	0.012	0.014	0.016	0.015	0.006	0.01	0.008	0.015	0.009	0.006	0.004	0.002	0.008	0.008	0.002	5.148	11.656	4.87	-11.85	3.304
3.313	5.094	11.887	4.962	-11.956	3.326	5.109	11.956	4.99	-11.975	3.346	0.01	0.015	0.012	0.012	0.006	0.006	0.008	0.017	0.01	0.005	0.003	0.003	0.007	0.007	0.002	5.141	11.675	4.933	-11.993	3.319
3.313	5.067	11.825	4.94	-11.981	3.328	5.085	11.9	4.971	-12.012	3.35	0.01	0.012	0.017	0.013	0.004	0.008	0.007	0.016	0.01	0.004	0.004	0.003	0.007	0.008	0.002	5.117	11.625	4.905	-12.025	3.324
3.313	5.08	11.862	4.958	-11.962	3.326	5.094	11.918	4.985	-11.987	3.344	0.009	0.011	0.014	0.013	0.004	0.007	0.006	0.015	0.011	0.005	0.003	0.002	0.006	0.007	0.002	5.128	11.662	4.931	-12	3.321
3.313	5.08	11.862	4.958	-11.962	3.326	5.094	11.918	4.985	-11.987	3.344	0.009	0.011	0.014	0.013	0.004	0.007	0.006	0.015	0.011	0.005	0.003	0.002	0.006	0.007	0.002	5.128	11.662	4.931	-12	3.321
3.317	5.053	11.793	4.955	-11.975	3.332	5.071	11.856	4.986	-11.993	3.354	0.009	0.011	0.018	0.013	0.006	0.007	0.005	0.018	0.009	0.007	0.003	0.002	0.008	0.007	0.002	5.101	11.593	4.924	-12.012	3.326
3.312	5.065	11.806	4.958	-11.95	3.325	5.08	11.875	4.985	-11.975	3.343	0.015	0.014	0.022	0.015	0.008	0.009	0.007	0.018	0.012	0.006	0.004	0.002	0.008	0.009	0.001	5.115	11.6	4.931	-11.987	3.32
3.291	5.078	11.843	4.976	-11.987	3.308	5.098	11.918	5.01	-12	3.332	0.008	0.012	0.021	0.014	0.007	0.007	0.006	0.017	0.008	0.007	0.003	0.002	0.007	0.008	0.002	5.126	11.631	4.945	-12.025	3.302
3.323	5.056	11.793	4.961	-11.975	3.335	5.069	11.85	4.987	-12	3.353	0.01	0.01	0.018	0.015	0.006	0.007	0.006	0.016	0.011	0.005	0.004	0.002	0.008	0.008	0.002	5.106	11.587	4.935	-12.012	3.331
3.301	5.048	11.793	4.945	-11.981	3.316	5.066	11.868	4.98	-12	3.338	0.013	0.014	0.014	0.01	0.006	0.008	0.007	0.016	0.008	0.006	0.004	0.003	0.008	0.007	0.002	5.096	11.587	4.908	-12.018	3.311
3.32	5.057	11.793	4.975	-11.975	3.333	5.071	11.856	5.001	-12	3.351	0.01	0.011	0.018	0.013	0.006	0.007	0.004	0.021	0.009	0.005	0.004	0.003	0.01	0.008	0.002	5.106	11.587	4.948	-12.012	3.328
3.328	5.085	11.862	4.966	-11.981	3.34	5.095	11.918	4.991	-12.006	3.356	0.011	0.012	0.015	0.013	0.005	0.01	0.007	0.017	0.011	0.006	0.004	0.003	0.007	0.01	0.002	5.136	11.662	4.94	-12.025	3.335
3.307	5.076	11.862	4.948	-11.95	3.323	5.095	11.931	4.981	-11.975	3.345	0.01	0.012	0.015	0.012	0.006	0.008	0.006	0.017	0.009	0.004	0.004	0.004	0.009	0.007	0.002	5.126	11.656	4.913	-11.993	3.317
3.318	5.06	11.787	4.969	-11.975	3.328	5.07	11.856	4.993	-12.006	3.343	0.012	0.013	0.018	0.014	0.007	0.008	0.008	0.015	0.012	0.005	0.004	0.003	0.007	0.009	0.002	5.111	11.593	4.943	-12.018	3.324
3.321	5.095	11.875	4.959	-11.812	3.336	5.111	11.95	4.99	-11.831	3.357	0.009	0.012	0.019	0.013	0.005	0.007	0.005	0.018	0.009	0.006	0.004	0.002	0.007	0.008	0.002	5.145	11.681	4.927	-11.843	3.331
3.3	5.068	11.818	4.938	-11.95	3.313	5.082	11.887	4.966	-11.981	3.333	0.01	0.013	0.021	0.013	0.007	0.008	0.007	0.018	0.01	0.007	0.004	0.002	0.008	0.008	0.002	5.118	11.618	4.911	-11.987	3.308
3.287	5.063	11.831	4.919	-11.975	3.308	5.089	11.912	4.976	-11.993	3.338	0.011	0.013	0.015	0.012	0.007	0.007	0.007	0.016	0.01	0.005	0.004	0.002	0.007	0.008	0.001	5.109	11.612	4.852	-12.012	3.301
3.315	5.071	11.812	5.013	-11.85	3.326	5.085	11.893	5.039	-11.875	3.345	0.009	0.012	0.015	0.014	0.004	0.008	0.006	0.017	0.008	0.006	0.004	0.002	0.008	0.008	0.002	5.123	11.618	4.986	-11.887	3.322
3.277	5.07	11.85	4.943	-11.993	3.306	5.094	11.925	4.981	-12.006	3.343	0.012	0.012	0.02	0.017	0.005	0.01	0.008	0.018	0.01	0.005	0.004	0.003	0.008	0.007	0.002	5.116	11.631	4.911	-12.031	3.3
3.316	5.095	11.875	4.96	-11.968	3.328	5.105	11.943	4.986	-11.987	3.345	0.01	0.01	0.016	0.012	0.005	0.007	0.006	0.017	0.01	0.004	0.004	0.002	0.009	0.008	0.001	5.143	11.656	4.933	-12.006	3.323
3.31	5.061	11.8	4.95	-11.925	3.324	5.075	11.881	4.976	-11.956	3.344	0.011	0.012	0.014	0.009	0.006	0.008	0.008	0.018	0.011	0.007	0.004	0.004	0.013	0.009	0.005	5.114	11.593	4.923	-11.962	3.32
3.465	5.25	12.600	5.250	-10.800	3.465	5.25	12.600	5.250	-10.800	3.465	0.070	0.120	0.100	0.250	0.050	0.070	0.120	0.100	0.250	0.050	0.070	0.120	0.100	0.250	0.050	5.25	12.600	5.250	-10.800	3.465
3.135	4.75	11.400	4.750	-13.200	3.135	4.75	11.400	4.750	-13.200	3.135																4.75	11.400	4.750	-13.200	3.135
3.275	5.043	11.768	4.894	-11.993	3.303	5.066	11.850	4.936	-12.012	3.328	0.008	0.010	0.012	0.009	0.004	0.006	0.004	0.014	0.008	0.003	0.003	0.002	0.006	0.006	0.001	5.091	11.543	4.843	-12.037	3.296
3.331	5.108	11.925	5.013	-11.800	3.342	5.133	11.993	5.039	-11.825	3.362	0.015	0.015	0.024	0.018	0.009	0.010	0.009	0.021	0.013	0.007	0.005	0.005	0.013	0.010	0.005	5.158	11.712	4.986	-11.837	3.337
3.310	5.078	11.844	4.955	-11.950	3.325	5.094	11.912	4.985	-11.975	3.346	0.010	0.012	0.017	0.013	0.006	0.008	0.006	0.017	0.010	0.006	0.004	0.002	0.008	0.008	0.002	5.128	11.640	4.924	-11.990	3.320
0.013	0.017	0.037	0.021	0.054	0.010	0.017	0.037	0.019	0.052	0.008	0.001	0.001	0.003	0.002	0.001	0.001	0.001	0.002	0.001	0.001	0.001	0.001	0.001	0.001	0.001	0.018	0.038	0.025	0.053	0.010
4.24	4.82	5.43	4.05	7.43	5.50	5.00	5.47	4.41	7.74	6.66	15.77	29.73	9.10	43.39	11.50	18.89	34.87	14.09	66.10	15.92	37.66	57.92	24.70	95.72	27.01	4.67	5.23	3.29	7.52	5.32
0.06	0.31	0.26	0.18	0.04	0.15	0.38	0.15	0.06	0.02	0.28																0.51	0.60	0.31	0.01	0.12
3.98	3.31	4.02	3.31	7.12	4.67	3.13	4.67	4.14	7.58	4.80	15.77	29.73	9.10	43.39	11.50	18.89	34.87	14.09	66.10	15.92	37.66	57.92	24.70	95.72	27.01	2.28	2.09	2.28	7.46	4.67
OK	**OK**	**OK**	**OK**	**OK**	**OK**	**OK**	**OK**	**OK**	**OK**	**OK**	**OK**	**OK**	**OK**	**OK**	**OK**	**OK**	**OK**	**OK**	**OK**	**OK**	**OK**	**OK**	**OK**	**OK**	**OK**	**OK**	**OK**	**OK**	**OK**	**OK**

13.CYCLE DROPOUT					14.STATIC(PEAK1)					14.STATIC(PEAK1)					15.STATIC(PEAK2)				
Vin:115V Fin60Hz Io:+5V/5A +12V/16A +5Vs/2A -12V/0.5A +3.3V/6A					Vin:115V Fin60Hz Io:+5V/5A +12V/17.3A +5Vs/2A -12V/0.1A +3.3V/5A					Vin:115V Fin60Hz Io:+5V/5A +12V/17.3A +5Vs/2A -12V/0.1A +3.3V/5A					Vin:115V Fin60Hz Io:+5V/6A +12V/17.3A +5Vs/1A -12V/0.3A +3.3V/1A				
Vdc(L)_1	Vdc(L)_2	Vdc(L)_3	Vdc(L)_4	Vdc(L)_5	Vdc+5V	Vdc+12V	Vdc+5Vs	Vdc-12V	Vdc+3.3V	Vpp+5V	Vpp+12V	Vpp+5Vs	Vpp-12V	Vpp+3.3V	Vdc+5V	Vdc+12V	Vdc+5Vs	Vdc-12V	Vdc+3.3V
5.12	11.6	4.898	-11.987	3.325	5.126	11.581	4.899	-12.012	3.326	0.01	0.008	0.018	0.014	0.006	5.125	11.6	4.926	-12	3.331
5.124	11.625	4.891	-11.981	3.309	5.131	11.612	4.89	-12.006	3.31	0.009	0.01	0.022	0.013	0.004	5.132	11.631	4.937	-11.993	3.318
5.125	11.631	4.961	-12.006	3.303	5.135	11.612	4.961	-12.031	3.303	0.009	0.009	0.02	0.014	0.008	5.135	11.631	4.99	-12.018	3.309
5.119	11.612	4.92	-11.962	3.322	5.126	11.6	4.921	-11.993	3.323	0.008	0.01	0.03	0.011	0.007	5.126	11.618	4.953	-11.981	3.33
5.13	11.643	4.916	-11.993	3.309	5.136	11.625	4.918	-12.018	3.31	0.009	0.009	0.023	0.014	0.007	5.136	11.643	4.946	-12.006	3.315
5.107	11.606	4.932	-12.012	3.294	5.113	11.593	4.933	-12.043	3.295	0.009	0.009	0.022	0.015	0.007	5.116	11.612	4.965	-12.025	3.306
5.124	11.606	4.94	-11.837	3.318	5.131	11.593	4.941	-11.862	3.318	0.009	0.01	0.023	0.015	0.006	5.13	11.612	4.969	-11.85	3.323
5.124	11.618	4.928	-12.006	3.309	5.13	11.606	4.927	-12.031	3.308	0.01	0.009	0.022	0.01	0.005	5.13	11.625	4.961	-12.018	3.316
5.136	11.65	4.923	-11.993	3.335	5.143	11.631	4.925	-12.018	3.336	0.008	0.011	0.02	0.011	0.005	5.143	11.65	4.951	-12.006	3.341
5.131	11.631	4.92	-11.968	3.313	5.138	11.612	4.921	-11.993	3.314	0.009	0.01	0.022	0.01	0.008	5.138	11.637	4.95	-11.981	3.322
5.122	11.631	4.92	-11.987	3.315	5.13	11.618	4.921	-12.012	3.315	0.01	0.009	0.022	0.015	0.006	5.13	11.631	4.949	-12	3.321
5.128	11.625	4.931	-12	3.316	5.135	11.612	4.933	-12.025	3.318	0.009	0.009	0.026	0.015	0.005	5.135	11.631	4.965	-12.012	3.328
5.13	11.643	4.93	-11.993	3.318	5.136	11.631	4.931	-12.018	3.318	0.008	0.009	0.021	0.012	0.006	5.136	11.65	4.958	-12.012	3.323
5.098	11.587	4.923	-12	3.32	5.105	11.575	4.924	-12.025	3.323	0.017	0.013	0.019	0.011	0.004	5.106	11.593	4.954	-12.012	3.336
5.147	11.675	4.903	-11.987	3.335	5.155	11.662	4.905	-12.012	3.336	0.008	0.01	0.019	0.015	0.005	5.155	11.675	4.933	-11.993	3.336
5.097	11.575	4.839	-11.981	3.32	5.103	11.562	4.842	-12.006	3.321	0.008	0.008	0.017	0.011	0.004	5.103	11.581	4.895	-11.993	3.329
5.136	11.668	4.952	-11.993	3.33	5.143	11.656	4.953	-12.025	3.331	0.009	0.008	0.018	0.017	0.005	5.143	11.675	4.981	-12.006	3.336
5.091	11.556	4.866	-11.818	3.319	5.098	11.537	4.868	-11.843	3.32	0.009	0.009	0.023	0.012	0.007	5.099	11.556	4.908	-11.831	3.328
5.152	11.675	4.921	-11.981	3.32	5.159	11.656	4.923	-12	3.321	0.008	0.009	0.016	0.014	0.004	5.158	11.675	4.951	-11.993	3.327
5.083	11.518	4.917	-11.981	3.314	5.091	11.506	4.918	-12.006	3.315	0.009	0.01	0.02	0.011	0.004	5.092	11.525	4.956	-11.993	3.325
5.146	11.65	4.94	-12.006	3.333	5.153	11.631	4.941	-12.031	3.333	0.009	0.011	0.024	0.012	0.007	5.152	11.65	4.969	-12.018	3.339
5.151	11.625	4.913	-11.868	3.308	5.16	11.612	4.916	-11.931	3.31	0.01	0.009	0.028	0.016	0.008	5.16	11.631	4.95	-11.912	3.318
5.104	11.575	4.933	-11.993	3.328	5.111	11.562	4.934	-12.018	3.329	0.01	0.011	0.02	0.012	0.005	5.111	11.575	4.961	-12.012	3.335
5.15	11.693	4.917	-11.843	3.335	5.158	11.681	4.918	-11.868	3.335	0.007	0.009	0.025	0.013	0.005	5.158	11.7	4.953	-11.856	3.342
5.147	11.675	4.903	-11.987	3.335	5.155	11.662	4.905	-12.012	3.336	0.008	0.01	0.019	0.015	0.005	5.155	11.675	4.933	-11.993	3.341
5.136	11.662	4.901	-12.012	3.313	5.144	11.65	4.904	-12.037	3.313	0.01	0.012	0.021	0.012	0.006	5.145	11.668	4.952	-12.025	3.321
5.126	11.631	4.919	-12	3.325	5.133	11.612	4.921	-12.025	3.326	0.01	0.009	0.025	0.012	0.006	5.133	11.631	4.95	-12.018	3.332
5.106	11.6	4.94	-11.993	3.322	5.113	11.581	4.941	-12.018	3.322	0.009	0.01	0.028	0.013	0.008	5.113	11.6	4.978	-12.006	3.33
5.149	11.681	4.924	-11.993	3.32	5.156	11.662	4.925	-12.018	3.321	0.009	0.01	0.021	0.016	0.004	5.156	11.681	4.953	-12.006	3.326
5.141	11.631	4.866	-11.831	3.301	5.148	11.618	4.866	-11.856	3.302	0.01	0.012	0.021	0.011	0.008	5.146	11.631	4.903	-11.843	3.309
5.133	11.65	4.927	-11.95	3.317	5.142	11.637	4.929	-11.993	3.318	0.011	0.014	0.019	0.011	0.005	5.141	11.662	4.956	-11.987	3.323
5.11	11.6	4.901	-12.006	3.322	5.118	11.587	4.901	-12.031	3.323	0.009	0.01	0.02	0.013	0.004	5.118	11.606	4.937	-12.018	3.33
5.122	11.643	4.926	-11.981	3.319	5.129	11.625	4.927	-12	3.32	0.007	0.008	0.017	0.015	0.005	5.129	11.643	4.955	-11.993	3.326
5.122	11.643	4.926	-11.981	3.319	5.129	11.625	4.927	-12	3.32	0.007	0.008	0.017	0.015	0.005	5.129	11.643	4.955	-11.993	3.326
5.096	11.575	4.918	-11.993	3.325	5.103	11.556	4.919	-12.018	3.325	0.008	0.008	0.02	0.013	0.006	5.103	11.575	4.952	-12.006	3.332
5.108	11.575	4.927	-11.968	3.318	5.115	11.562	4.928	-11.993	3.318	0.012	0.011	0.023	0.014	0.006	5.116	11.581	4.956	-11.981	3.325
5.119	11.606	4.938	-12.006	3.299	5.126	11.587	4.94	-12.031	3.3	0.009	0.011	0.027	0.012	0.007	5.127	11.606	4.973	-12.018	3.308
5.099	11.568	4.929	-11.987	3.328	5.106	11.55	4.931	-12.018	3.329	0.009	0.008	0.022	0.016	0.007	5.106	11.568	4.958	-12.006	3.335
5.088	11.568	4.903	-12	3.308	5.096	11.556	4.904	-12.025	3.31	0.012	0.013	0.02	0.015	0.005	5.097	11.575	4.943	-12.012	3.317
5.1	11.562	4.943	-11.987	3.326	5.107	11.55	4.944	-12.012	3.326	0.008	0.008	0.025	0.012	0.005	5.107	11.575	4.972	-12.006	3.333
5.128	11.637	4.935	-12	3.333	5.136	11.618	4.936	-12.025	3.334	0.01	0.011	0.017	0.016	0.004	5.135	11.643	4.964	-12.012	3.34
5.119	11.631	4.908	-11.968	3.315	5.126	11.618	4.909	-11.993	3.316	0.009	0.009	0.022	0.017	0.006	5.128	11.637	4.945	-11.987	3.323
5.104	11.575	4.938	-11.993	3.322	5.112	11.562	4.94	-12.018	3.323	0.011	0.01	0.022	0.015	0.006	5.111	11.575	4.967	-12.006	3.328
5.139	11.656	4.921	-11.825	3.328	5.145	11.631	4.923	-11.85	3.329	0.009	0.007	0.022	0.01	0.004	5.145	11.656	4.956	-11.837	3.336
5.111	11.593	4.906	-11.968	3.306	5.118	11.581	4.907	-11.993	3.307	0.008	0.009	0.024	0.012	0.007	5.118	11.6	4.935	-11.981	3.313
5.104	11.593	4.845	-11.993	3.3	5.111	11.581	4.848	-12.018	3.3	0.01	0.01	0.02	0.011	0.009	5.113	11.6	4.919	-12.006	3.31
5.115	11.593	4.981	-11.868	3.32	5.123	11.575	4.982	-11.887	3.321	0.009	0.01	0.023	0.018	0.005	5.123	11.6	5.01	-11.875	3.326
5.11	11.612	4.906	-12.012	3.298	5.116	11.593	4.906	-12.037	3.3	0.012	0.011	0.022	0.015	0.005	5.12	11.612	4.94	-12.025	3.313
5.136	11.637	4.928	-11.981	3.321	5.145	11.625	4.929	-12.006	3.322	0.008	0.008	0.018	0.012	0.004	5.144	11.643	4.957	-11.987	3.328
5.106	11.562	4.917	-11.943	3.319	5.111	11.55	4.918	-11.968	3.319	0.017	0.028	0.027	0.011	0.006	5.103	11.55	4.948	-11.956	3.325
5.25	12.600	5.250	-10.800	3.465	5.25	13.200	5.250	-10.800	3.465	0.070	0.120	0.100	0.250	0.050	5.25	13.200	5.250	-10.800	3.465
4.75	11.400	4.750	-13.200	3.135	4.75	10.800	4.750	-13.200	3.135						4.75	10.800	4.750	-13.200	3.135
5.083	11.518	4.839	-12.012	3.294	5.091	11.506	4.842	-12.043	3.295	0.007	0.007	0.016	0.010	0.004	5.092	11.525	4.895	-12.025	3.306
5.152	11.693	4.981	-11.818	3.335	5.160	11.681	4.982	-11.843	3.336	0.017	0.028	0.030	0.018	0.009	5.160	11.700	5.010	-11.831	3.342
5.121	11.618	4.918	-11.968	3.318	5.128	11.602	4.919	-11.994	3.319	0.009	0.010	0.022	0.013	0.006	5.128	11.621	4.952	-11.982	3.326
0.018	0.038	0.025	0.054	0.010	0.018	0.038	0.025	0.053	0.010	0.002	0.003	0.003	0.002	0.001	0.018	0.038	0.020	0.053	0.009
4.64	5.24	3.29	7.40	5.33	4.58	10.61	3.32	7.52	5.35	10.35	12.34	8.25	38.07	11.01	4.63	10.47	4.13	7.49	5.88
0.48	0.64	0.33	0.03	0.11	0.51	0.33	0.32	0.00	0.11						0.51	0.32	0.19	0.01	0.16
2.39	1.90	2.22	7.20	4.75	2.23	7.10	2.25	7.48	4.74	10.35	12.34	8.25	38.07	11.01	2.26	7.16	3.34	7.38	4.96
OK	**OK**	**OK**	**OK**	**OK**	**OK**	**OK**	**OK**	**OK**	**OK**	**OK**	**OK**	**OK**	**OK**	**OK**	**OK**	**OK**	**OK**	**OK**	**OK**

15.STATIC(PEAK2)					16.DYNAMIC(MIN)					16.DYNAMIC(MIN)					16.DYNAMIC(MIN)				
Vin:115V Fin60Hz Io:+5V/6A +12V/17.3A +5Vs/1A -12V/0.3A +3.3V/1A					Vin:115V Fin60Hz Io:+5V/1A +12V/0A +5Vs/0A -12V/0A +3.3V/0.3A					Vin:115V Fin60Hz Io:+5V/7.2A +12V/7A +5Vs/0.7A -12V/0.4A +3.3V/6A					Vin:115V Fin60Hz Io:+5V/7.2A +12V/7A +5Vs/0.7A -12V/0.4A +3.3V/6A				
Vpp+5V	Vpp+12V	Vpp+5Vs	Vpp-12V	Vpp+3.3V	Vs+5V	Vs+12V	Vs+5Vs	Vs-12V	Vs+3.3V	Vs+5V	Vs+12V	Vs+5Vs	Vs-12V	Vs+3.3V	Vpp+5V	Vpp+12V	Vpp+5Vs	Vpp-12V	Vpp+3.3V
0.01	0.008	0.017	0.012	0.006	5.049	12.112	4.958	-12.012	3.35	5.066	11.881	4.936	-12	3.336	0.271	0.785	0.223	0.096	0.185
0.008	0.009	0.018	0.013	0.004	5.05	12.168	4.992	-11.993	3.342	5.078	11.906	4.96	-11.993	3.324	0.285	0.745	0.241	0.088	0.194
0.009	0.008	0.018	0.015	0.008	5.055	12.162	5.021	-12.037	3.33	5.076	11.906	5.008	-12.031	3.315	0.274	0.747	0.224	0.086	0.178
0.009	0.009	0.021	0.014	0.007	5.053	12.137	4.992	-11.987	3.352	5.071	11.893	4.975	-11.981	3.336	0.283	0.731	0.266	0.072	0.196
0.009	0.008	0.02	0.011	0.006	5.059	12.15	4.976	-12.025	3.335	5.08	11.912	4.967	-12.006	3.321	0.265	0.732	0.212	0.098	0.175
0.01	0.008	0.014	0.011	0.006	5.06	12.125	5	-12.025	3.343	5.063	11.881	4.995	-12.025	3.312	0.328	0.794	0.26	0.068	0.227
0.008	0.007	0.019	0.012	0.007	5.045	12.137	5.002	-11.868	3.343	5.073	11.887	4.978	-11.856	3.33	0.287	0.75	0.177	0.101	0.18
0.009	0.01	0.018	0.011	0.005	5.063	12.162	4.999	-12.025	3.341	5.078	11.9	4.99	-12.025	3.322	0.294	0.794	0.235	0.078	0.202
0.008	0.011	0.015	0.011	0.005	5.063	12.175	4.975	-12.025	3.358	5.083	11.925	4.965	-12.012	3.345	0.284	0.805	0.227	0.102	0.178
0.01	0.008	0.019	0.011	0.006	5.059	12.162	4.982	-12	3.343	5.085	11.912	4.973	-11.981	3.326	0.269	0.735	0.222	0.087	0.196
0.01	0.007	0.022	0.016	0.006	5.06	12.131	4.974	-12.018	3.341	5.074	11.912	4.966	-12	3.327	0.281	0.761	0.179	0.068	0.182
0.009	0.009	0.022	0.015	0.005	5.064	12.143	5.002	-12.031	3.351	5.081	11.912	4.987	-12.012	3.33	0.304	0.759	0.214	0.085	0.2
0.009	0.009	0.02	0.011	0.005	5.06	12.143	4.98	-12.031	3.339	5.078	11.918	4.98	-12.006	3.327	0.276	0.76	0.226	0.085	0.179
0.017	0.011	0.016	0.012	0.004	5.033	12.125	4.984	-12.025	3.363	5.055	11.868	4.98	-12.025	3.337	0.319	0.785	0.239	0.089	0.215
0.017	0.011	0.016	0.012	0.004	5.033	12.115	4.984	-12.025	3.363	5.055	11.868	4.98	-12.025	3.337	0.319	0.785	0.239	0.089	0.212
0.007	0.007	0.016	0.01	0.004	5.035	12.112	4.95	-12.006	3.355	5.05	11.856	4.926	-12	3.335	0.3	0.859	0.251	0.085	0.196
0.009	0.007	0.016	0.013	0.004	5.069	12.193	5.009	-12.025	3.356	5.086	11.95	4.998	-12.012	3.341	0.289	0.834	0.199	0.078	0.186
0.01	0.009	0.018	0.017	0.007	5.033	12.125	4.952	-11.837	3.356	5.047	11.85	4.932	-11.837	3.335	0.3	0.867	0.268	0.087	0.209
0.009	0.008	0.014	0.012	0.005	5.075	12.237	4.974	-12.006	3.347	5.101	11.962	4.98	-11.993	3.333	0.303	0.888	0.263	0.087	0.183
0.01	0.008	0.015	0.01	0.004	5.024	12.131	4.994	-12	3.355	5.043	11.831	4.988	-11.993	3.331	0.327	0.946	0.244	0.075	0.222
0.009	0.01	0.021	0.012	0.007	5.071	12.231	4.992	-12.031	3.358	5.096	11.937	4.994	-12.025	3.345	0.3	0.91	0.232	0.078	0.18
0.01	0.009	0.026	0.018	0.008	5.095	12.125	4.978	-11.943	3.34	5.105	11.9	4.971	-11.918	3.32	0.308	0.854	0.242	0.051	0.196
0.01	0.011	0.015	0.012	0.005	5.028	12.131	4.988	-12.031	3.352	5.056	11.856	4.975	-12.012	3.341	0.296	0.861	0.261	0.074	0.18
0.009	0.009	0.023	0.012	0.005	5.086	12.206	4.985	-11.862	3.366	5.11	11.981	4.975	-11.843	3.348	0.293	0.866	0.196	0.059	0.198
0.009	0.008	0.016	0.015	0.004	5.076	12.225	4.956	-12.012	3.361	5.105	11.956	4.957	-12	3.347	0.303	0.889	0.259	0.084	0.19
0.01	0.011	0.02	0.011	0.006	5.081	12.212	5	-12.037	3.346	5.09	11.937	4.985	-12.031	3.326	0.315	0.911	0.277	0.062	0.204
0.011	0.007	0.021	0.012	0.005	5.055	12.193	4.983	-12.031	3.356	5.079	11.918	4.969	-12.012	3.34	0.307	0.858	0.205	0.067	0.192
0.009	0.009	0.021	0.013	0.006	5.047	12.112	5.018	-12.018	3.353	5.06	11.881	4.998	-12.012	3.336	0.3	0.769	0.252	0.074	0.194
0.008	0.009	0.018	0.013	0.005	5.078	12.225	4.988	-12.018	3.346	5.1	11.962	4.97	-12.012	3.333	0.309	0.877	0.208	0.099	0.183
0.011	0.01	0.018	0.012	0.005	5.073	12.218	4.929	-11.856	3.331	5.092	11.925	4.934	-11.843	3.314	0.309	0.93	0.251	0.064	0.206
0.01	0.013	0.016	0.011	0.005	5.074	12.2	4.98	-12	3.35	5.089	11.943	4.982	-11.981	3.331	0.303	0.891	0.229	0.089	0.186
0.009	0.008	0.018	0.013	0.004	5.056	12.131	4.97	-12.031	3.353	5.066	11.875	4.968	-12.006	3.336	0.31	0.913	0.244	0.064	0.206
0.008	0.007	0.014	0.012	0.004	5.055	12.181	4.981	-12.006	3.346	5.074	11.918	4.976	-11.993	3.332	0.299	0.881	0.235	0.083	0.182
0.008	0.007	0.014	0.012	0.004	5.055	12.181	4.981	-12.006	3.346	5.074	11.918	4.976	-11.993	3.332	0.299	0.881	0.235	0.083	0.182
0.009	0.007	0.019	0.014	0.006	5.033	12.106	4.984	-12.012	3.356	5.053	11.85	4.973	-12.012	3.338	0.311	0.858	0.224	0.088	0.2
0.012	0.01	0.02	0.017	0.006	5.033	12.15	4.985	-12	3.345	5.061	11.862	4.974	-11.981	3.331	0.298	0.888	0.222	0.082	0.187
0.008	0.009	0.022	0.013	0.008	5.058	12.181	5.011	-12.025	3.335	5.076	11.912	4.99	-12.018	3.315	0.319	0.882	0.185	0.094	0.199
0.009	0.007	0.02	0.016	0.006	5.032	12.1	4.986	-12.012	3.356	5.051	11.85	4.985	-12.006	3.341	0.296	0.85	0.21	0.085	0.183
0.012	0.01	0.016	0.012	0.004	5.02	12.131	4.985	-12.037	3.341	5.048	11.85	4.968	-12	3.324	0.309	0.88	0.257	0.065	0.199
0.008	0.007	0.019	0.01	0.005	5.037	12.068	5.004	-12.012	3.355	5.05	11.856	4.981	-12.006	3.338	0.284	0.734	0.213	0.084	0.183
0.01	0.009	0.016	0.012	0.005	5.061	12.168	4.994	-12.031	3.36	5.081	11.918	4.98	-12.018	3.345	0.292	0.892	0.243	0.091	0.182
0.009	0.007	0.016	0.011	0.005	5.059	12.175	4.977	-11.993	3.348	5.073	11.912	4.975	-11.987	3.329	0.314	0.877	0.223	0.081	0.203
0.011	0.009	0.018	0.013	0.005	5.028	12.1	4.985	-12.031	3.344	5.055	11.843	4.991	-12.006	3.332	0.289	0.853	0.244	0.083	0.186
0.008	0.008	0.02	0.009	0.005	5.079	12.206	4.976	-11.85	3.36	5.091	11.925	4.987	-11.837	3.342	0.324	0.893	0.242	0.073	0.206
0.008	0.009	0.021	0.013	0.009	5.05	12.125	4.965	-11.993	3.336	5.064	11.868	4.953	-11.987	3.32	0.307	0.87	0.25	0.086	0.183
0.01	0.01	0.019	0.011	0.007	5.057	12.162	5	-12.012	3.341	5.063	11.887	4.951	-12.012	3.317	0.321	0.934	0.307	0.09	0.202
0.008	0.007	0.018	0.015	0.004	5.046	12.15	5.035	-11.893	3.347	5.065	11.875	5.03	-11.881	3.331	0.297	0.864	0.205	0.079	0.179
0.011	0.009	0.021	0.011	0.004	5.043	12.212	4.975	-12.025	3.348	5.072	11.906	4.966	-12.012	3.316	0.322	0.847	0.232	0.076	0.221
0.008	0.007	0.017	0.012	0.003	5.075	12.193	4.992	-12.012	3.349	5.088	11.925	4.971	-12	3.333	0.286	0.868	0.24	0.092	0.182
0.017	0.028	0.022	0.012	0.006	5.034	12.1	4.988	-11.981	3.342	5.058	11.837	4.958	-11.962	3.329	0.29	0.747	0.187	0.106	0.149
0.070	0.120	0.100	0.250	0.050	5.25	12.600	5.250	-10.800	3.465	5.25	12.600	5.250	-10.800	3.465	0.500	1.200	0.500	1.200	0.340
					4.75	11.400	4.750	-13.200	3.135	4.75	11.400	4.750	-13.200	3.135					
0.007	0.007	0.014	0.009	0.003	5.020	12.068	4.929	-12.037	3.330	5.043	11.831	4.926	-12.031	3.312	0.265	0.731	0.177	0.051	0.149
0.017	0.028	0.026	0.018	0.009	5.095	12.237	5.035	-11.837	3.366	5.110	11.981	5.030	-11.837	3.348	0.328	0.946	0.307	0.106	0.227
0.010	0.009	0.018	0.013	0.005	5.054	12.157	4.985	-11.996	3.349	5.073	11.898	4.975	-11.984	3.331	0.299	0.838	0.232	0.082	0.192
0.002	0.003	0.003	0.002	0.001	0.018	0.041	0.019	0.054	0.009	0.017	0.036	0.019	0.054	0.009	0.015	0.063	0.026	0.012	0.014
9.31	12.01	10.07	40.59	11.37	4.71	4.89	4.50	7.47	6.41	4.93	5.52	4.42	7.41	5.98	4.32	1.93	3.43	31.80	3.45
					0.22	0.26	0.06	0.00	0.29	0.29	0.17	0.10	0.01	0.19					
9.31	12.01	10.07	40.59	11.37	3.69	3.61	4.24	7.45	4.52	3.48	4.58	3.97	7.32	4.85	4.32	1.93	3.43	31.80	3.45
OK	**OK**	**OK**	**OK**	**OK**	**OK**	**OK**	**OK**	**OK**	**OK**	**OK**	**OK**	**OK**	**OK**	**OK**	**OK**	**OK**	**OK**	**OK**	**OK**

Test#	17.DYNAMIC(MID)					17.DYNAMIC(MID)					17.DYNAMIC(MID)					18.DYNAMIC(MAX)					18.DYNAMIC(MAX)				
Unit No	Vin:115V Fin60Hz Io:+5V/1A +12V/9A +5Vs/0.7A -12V/0.4A +3.3V/6A					Vin:115V Fin60Hz Io:+5V/5A +12V/16A +5Vs/1.4A -12V/0.8A +3.3V/9A					Vin:115V Fin60Hz Io:+5V/5A +12V/16A +5Vs/1.4A -12V/0.8A +3.3V/9A					Vin:115V Fin60Hz Io:+5V/16A +12V/1A +5Vs/1A -12V/0.1A +3.3V/1A					Vin:115V Fin60Hz Io:+5V/22A +12V/5A +5Vs/2A -12V/1A +3.3V/4A				
	Vs+5V	Vs+12V	Vs+5Vs	Vs-12V	Vs+3.3V	Vs+5V	Vs+12V	Vs+5Vs	Vs-12V	Vs+3.3V	Vpp+5V	Vpp+12V	Vpp+5Vs	Vpp-12V	Vpp+3.3V	Vs+5V	Vs+12V	Vs+5Vs	Vs-12V	Vs+3.3V	Vs+5V	Vs+12V	Vs+5Vs	Vs-12V	Vs+3.3V
1	5.139	11.712	4.935	-11.99	3.34	5.096	11.587	4.911	-11.987	3.328	0.06	0.256	0.048	0.014	0.041	5.018	12.343	4.964	-12.012	3.348	4.89	12.187	4.863	-11.956	3.295
2	5.15	11.737	4.953	-11.98	3.328	5.104	11.625	4.912	-11.981	3.312	0.058	0.231	0.065	0.011	0.037	5.026	12.35	4.975	-11.981	3.336	4.89	12.2	4.848	-11.975	3.281
3	5.148	11.737	4.993	-12.02	3.318	5.107	11.631	4.98	-12.012	3.306	0.056	0.239	0.048	0.014	0.043	5.035	12.368	5.019	-12.012	3.326	4.892	12.2	4.933	-11.993	3.27
4	5.14	11.725	4.956	-11.98	3.34	5.101	11.612	4.949	-11.968	3.327	0.055	0.233	0.055	0.013	0.044	5.023	12.356	4.983	-11.975	3.353	4.885	12.193	4.893	-11.956	3.29
5	5.152	11.737	4.954	-12	3.323	5.103	11.631	4.933	-11.993	3.31	0.053	0.23	0.05	0.014	0.042	5.037	12.375	4.973	-12	3.335	4.895	12.206	4.893	-11.981	3.278
6	5.137	11.718	4.986	-12.01	3.319	5.086	11.606	4.941	-12.006	3.293	0.066	0.251	0.059	0.01	0.04	5.016	12.343	5.008	-12.031	3.329	4.873	12.168	4.895	-11.987	3.265
7	5.146	11.725	4.982	-11.84	3.334	5.099	11.606	4.946	-11.837	3.321	0.055	0.245	0.05	0.014	0.04	5.024	12.35	5.01	-11.843	3.338	4.893	12.187	4.899	-11.831	3.287
8	5.148	11.743	4.971	-12.01	3.325	5.106	11.612	4.948	-12	3.311	0.068	0.263	0.056	0.01	0.038	5.025	12.343	5.001	-12	3.337	4.894	12.193	4.887	-12	3.278
9	5.16	11.762	4.957	-12.01	3.35	5.11	11.637	4.94	-11.993	3.338	0.062	0.271	0.047	0.014	0.034	5.04	12.368	4.99	-12	3.356	4.906	12.225	4.883	-11.981	3.308
10	5.153	11.743	4.956	-11.98	3.329	5.11	11.631	4.942	-11.968	3.316	0.053	0.239	0.049	0.013	0.044	5.024	12.375	4.983	-11.981	3.339	4.898	12.218	4.886	-11.956	3.278
11	5.145	11.737	4.959	-11.99	3.331	5.1	11.631	4.938	-11.993	3.318	0.059	0.246	0.054	0.015	0.045	5.03	12.362	4.983	-11.993	3.335	4.891	12.206	4.888	-11.981	3.285
12	5.155	11.737	4.972	-12.01	3.333	5.103	11.625	4.956	-11.987	3.316	0.059	0.243	0.055	0.015	0.041	5.033	12.368	5.01	-12.006	3.343	4.886	12.206	4.883	-11.987	3.286
13	5.147	11.75	4.971	-12.01	3.333	5.108	11.643	4.942	-12	3.319	0.054	0.24	0.047	0.015	0.041	5.033	12.375	5.001	-12.006	3.34	4.896	12.225	4.89	-11.987	3.288
14	5.126	11.7	4.962	-12.01	3.342	5.079	11.587	4.94	-11.993	3.32	0.067	0.263	0.052	0.011	0.042	5.021	12.312	4.976	-12	3.356	4.849	12.162	4.899	-11.993	3.293
15	5.165	11.775	4.962	-12.02	3.331	5.111	11.643	4.933	-12	3.316	0.078	0.293	0.067	0.015	0.037	5.038	12.387	4.991	-12.012	3.336	4.901	12.243	4.867	-12.006	3.284
16	5.123	11.687	4.91	-11.98	3.337	5.073	11.575	4.878	-11.975	3.322	0.069	0.272	0.066	0.013	0.037	4.998	12.312	4.929	-11.981	3.345	4.854	12.156	4.811	-11.975	3.29
17	5.158	11.775	4.987	-12.01	3.345	5.113	11.656	4.973	-11.993	3.333	0.063	0.259	0.048	0.014	0.039	5.039	12.4	5.018	-12	3.353	4.908	12.25	4.914	-11.993	3.298
18	5.121	11.681	4.927	-11.82	3.34	5.068	11.543	4.881	-11.818	3.321	0.069	0.276	0.06	0.013	0.049	4.994	12.312	4.947	-11.825	3.341	4.846	12.156	4.831	-11.8	3.285
19	5.178	11.8	4.958	-11.98	3.336	5.121	11.662	4.941	-11.968	3.326	0.071	0.285	0.047	0.014	0.038	5.049	12.425	4.994	-12	3.343	4.913	12.275	4.882	-11.962	3.29
20	5.113	11.662	4.958	-11.98	3.335	5.059	11.506	4.948	-11.975	3.316	0.084	0.309	0.058	0.01	0.041	4.973	12.281	4.998	-11.993	3.343	4.854	12.131	4.881	-11.956	3.28
21	5.168	11.768	4.976	-12.01	3.349	5.12	11.631	4.959	-12.006	3.335	0.073	0.298	0.052	0.016	0.037	5.048	12.393	5.013	-12.018	3.355	4.918	12.25	4.896	-12	3.302
22	5.173	11.743	4.955	-11.91	3.322	5.129	11.618	4.938	-11.875	3.309	0.061	0.261	0.054	0.023	0.029	5.067	12.325	4.977	-11.9	3.331	4.932	12.181	4.892	-11.875	3.284
23	5.126	11.693	4.973	-12.01	3.343	5.076	11.562	4.949	-11.993	3.335	0.069	0.283	0.046	0.015	0.04	5.012	12.312	4.996	-12	3.345	4.873	12.162	4.903	-11.987	3.298
24	5.175	11.812	4.955	-11.84	3.351	5.126	11.681	4.942	-11.837	3.339	0.066	0.266	0.056	0.015	0.036	5.05	12.45	4.966	-11.862	3.36	4.91	12.275	4.908	-11.812	3.303
25	5.168	11.793	4.94	-11.99	3.35	5.126	11.662	4.92	-11.975	3.338	0.07	0.283	0.047	0.015	0.034	5.048	12.4	4.973	-12	3.35	4.923	12.268	4.865	-11.962	3.306
26	5.165	11.775	4.962	-12.02	3.331	5.111	11.643	4.933	-12	3.316	0.078	0.293	0.067	0.015	0.037	5.038	12.387	4.991	-12.012	3.336	4.901	12.243	4.867	-12.006	3.284
27	5.153	11.75	4.951	-12.01	3.343	5.1	11.625	4.939	-12	3.328	0.064	0.266	0.051	0.013	0.04	5.032	12.381	4.975	-12.025	3.346	4.886	12.218	4.898	-11.981	3.293
28	5.128	11.712	4.996	-11.99	3.341	5.085	11.587	4.952	-11.993	3.325	0.062	0.249	0.058	0.015	0.045	5.011	12.331	5.02	-12	3.345	4.883	12.168	4.901	-11.981	3.292
29	5.175	11.8	4.961	-11.99	3.337	5.123	11.668	4.943	-11.993	3.324	0.068	0.277	0.051	0.015	0.033	5.05	12.418	4.994	-11.993	3.341	4.917	12.268	4.878	-11.987	3.293
30	5.17	11.762	4.909	-11.83	3.317	5.111	11.618	4.896	-11.825	3.304	0.084	0.294	0.055	0.014	0.032	5.035	12.387	4.936	-11.837	3.328	4.899	12.237	4.838	-11.812	3.27
31	5.16	11.775	4.971	-11.98	3.336	5.11	11.631	4.941	-11.968	3.32	0.066	0.282	0.05	0.011	0.036	5.041	12.393	4.998	-11.981	3.338	4.904	12.25	4.893	-11.962	3.288
32	5.137	11.718	4.944	-12.02	3.339	5.084	11.581	4.927	-11.993	3.326	0.078	0.293	0.054	0.013	0.038	5.016	12.325	4.97	-12.031	3.346	4.877	12.181	4.871	-11.975	3.298
33	5.149	11.756	4.96	-11.99	3.333	5.096	11.631	4.945	-11.975	3.323	0.068	0.275	0.047	0.017	0.04	5.022	12.368	4.998	-11.987	3.341	4.895	12.218	4.892	-11.981	3.288
34	5.149	11.756	4.96	-11.99	3.333	5.096	11.631	4.945	-11.975	3.323	0.068	0.275	0.047	0.017	0.04	5.022	12.368	4.998	-11.987	3.341	4.895	12.218	4.892	-11.981	3.288
35	5.12	11.687	4.967	-11.99	3.343	5.07	11.562	4.936	-11.987	3.327	0.07	0.276	0.053	0.012	0.039	4.999	12.312	4.973	-11.993	3.351	4.859	12.15	4.897	-11.987	3.293
36	5.129	11.7	4.955	-11.98	3.333	5.078	11.562	4.955	-11.956	3.323	0.073	0.281	0.052	0.016	0.04	5.013	12.312	4.992	-11.993	3.342	4.881	12.162	4.895	-11.943	3.288
37	5.147	11.737	4.983	-12.01	3.32	5.098	11.593	4.956	-12.006	3.301	0.069	0.268	0.058	0.01	0.039	5.019	12.356	5.01	-12.006	3.328	4.883	12.206	4.9	-12	3.269
38	5.121	11.675	4.965	-11.99	3.346	5.075	11.556	4.949	-11.993	3.333	0.067	0.271	0.047	0.014	0.038	5.007	12.287	4.984	-11.993	3.353	4.87	12.143	4.905	-11.981	3.299
39	5.119	11.681	4.964	-12	3.328	5.063	11.562	4.92	-11.993	3.313	0.078	0.287	0.057	0.013	0.046	4.98	12.312	4.986	-12.006	3.333	4.851	12.162	4.864	-11.981	3.278
40	5.12	11.681	4.986	-11.99	3.343	5.079	11.568	4.959	-11.987	3.33	0.055	0.228	0.051	0.012	0.042	5.004	12.293	4.99	-12.006	3.347	4.875	12.143	4.928	-11.981	3.298
41	5.15	11.737	4.972	-12.01	3.35	5.103	11.625	4.955	-12	3.336	0.068	0.277	0.048	0.015	0.039	5.036	12.368	4.98	-12.012	3.353	4.902	12.225	4.914	-11.987	3.305
42	5.151	11.743	4.958	-11.98	3.334	5.092	11.625	4.925	-11.962	3.318	0.071	0.276	0.055	0.013	0.038	5.011	12.375	4.981	-11.981	3.343	4.886	12.225	4.872	-11.962	3.286
43	5.128	11.687	4.97	-12.01	3.336	5.077	11.556	4.958	-11.993	3.326	0.067	0.276	0.047	0.018	0.036	5.008	12.287	5.003	-12.012	3.341	4.88	12.15	4.908	-11.975	3.292
44	5.161	11.762	4.969	-11.84	3.344	5.118	11.637	4.936	-11.825	3.331	0.071	0.282	0.055	0.01	0.032	5.035	12.381	4.991	-11.831	3.348	4.899	12.225	4.888	-11.818	3.296
45	5.138	11.712	4.942	-11.98	3.325	5.086	11.581	4.923	-11.968	3.309	0.065	0.27	0.051	0.013	0.033	5.018	12.325	4.965	-11.981	3.327	4.875	12.168	4.878	-11.956	3.278
46	5.132	11.718	4.946	-11.99	3.323	5.081	11.581	4.886	-11.993	3.302	0.081	0.303	0.082	0.007	0.037	5	12.337	4.971	-12	3.33	4.86	12.181	4.803	-11.993	3.271
47	5.139	11.712	5.016	-11.88	3.335	5.089	11.575	5	-11.862	3.325	0.064	0.27	0.048	0.015	0.034	5.02	12.343	5.04	-11.868	3.344	4.876	12.193	4.955	-11.862	3.288
48	5.143	11.731	4.951	-12.01	3.321	5.083	11.606	4.923	-12.018	3.298	0.068	0.263	0.06	0.007	0.04	5.013	12.375	4.966	-12	3.333	4.871	12.2	4.881	-12.006	3.27
49	5.16	11.756	4.966	-11.98	3.336	5.111	11.631	4.945	-11.981	3.324	0.066	0.276	0.046	0.012	0.034	5.038	12.381	4.986	-11.987	3.341	4.909	12.237	4.902	-11.962	3.291
50	5.131	11.675	4.965	--11.956	3.33	5.093	11.55	4.926	--11.943	3.322	0.057	0.216	0.048	0.016	0.024	5.003	12.275	4.971	-11.95	3.33	4.853	12.137	4.904	-11.943	3.304
UCL	5.25	12.600	5.250	-10.800	3.465	5.25	12.600	5.250	-10.800	3.465	0.500	1.200	0.500	1.200	0.340	5.25	12.600	5.250	-10.800	3.465	5.25	12.600	5.250	-10.800	3.465
LCL	4.75	11.400	4.750	-13.200	3.135	4.75	11.400	4.750	-13.200	3.135						4.75	11.400	4.750	-13.200	3.135	4.75	11.400	4.750	-13.200	3.135
Min	5.113	11.662	4.909	-12.018	3.317	5.059	11.506	4.878	-12.018	3.293	0.053	0.216	0.046	0.007	0.024	4.973	12.275	4.929	-12.031	3.326	4.846	12.131	4.803	-12.006	3.265
Max	5.178	11.812	5.016	-11.818	3.351	5.129	11.681	5.000	-11.818	3.339	0.084	0.309	0.082	0.023	0.049	5.067	12.450	5.040	-11.825	3.360	4.932	12.275	4.955	-11.800	3.308
Average	5.146	11.733	4.962	-11.976	3.335	5.097	11.608	4.938	-11.967	3.321	0.066	0.267	0.053	0.014	0.038	5.023	12.353	4.987	-11.978	3.342	4.887	12.201	4.886	-11.958	3.288
Sigma	0.017	0.036	0.019	0.054	0.009	0.018	0.037	0.022	0.055	0.011	0.008	0.021	0.007	0.003	0.004	0.019	0.039	0.021	0.054	0.009	0.020	0.039	0.027	0.055	0.010
Cp	4.86	5.50	4.32	7.35	6.05	4.74	5.36	3.71	7.33	5.11	18.45	14.65	21.27	146.68	22.57	4.48	5.11	3.98	7.41	6.45	4.10	5.16	3.07	7.24	5.28
Ca	0.58	0.45	0.15	0.02	0.21	0.39	0.65	0.25	0.03	0.13						0.09	0.59	0.05	0.02	0.25	0.45	0.33	0.45	0.04	0.07
CPK	2.02	3.05	3.66	7.20	4.77	2.90	1.86	2.79	7.13	4.47	18.45	14.65	21.27	146.68	22.57	4.06	2.10	3.77	7.27	4.82	2.25	3.44	1.67	6.99	4.90
Result	**OK**	**OK**	**OK**	**OK**	**OK**	**OK**	**OK**	**OK**	**OK**	**OK**	**OK**	**OK**	**OK**	**OK**	**OK**	**OK**	**OK**	**OK**	**OK**	**OK**	**OK**	**OK**	**OK**	**OK**	**OK**

18.DYNAMIC(MAX)					19.INPUT/OUTPUT(EFF)			20.OLP				21.INPUT/OUTPUT(5W)	21.INPUT/OUTPUT(1W)
Vin:115V Fin60Hz Io:+5V/22A +12V/5A +5Vs/2A -12V/1A +3.3V/4A					Vin:115V Fin60Hz Io:+5V/20A +12V/6.5A +5Vs/2A -12V/1A +3.3V/15A			Vin:115V Fin60Hz				Vin:115V Fin60Hz Io:+5V/0A +12V/0A +5Vs/0.4A -12V/0A +3.3V/0A	Vin:120V Fin60Hz Io:+5V/0A +12V/0A +5Vs/0.1A -12V/0A +3.3V/0A
Vpp+5V	Vpp+12V	Vpp+5Vs	Vpp-12V	Vpp+3.3V	Iinrms(A)	EFF	PF	OLP(5Vfp)	OLP(+5V)	OLP(+12V)	OLP(+3.3V)	5W	1W
0.136	0.145	0.164	0.04	0.08	3.857	72.439	0.781	3.4	34	18.51	27	2.906	0.968
0.138	0.141	0.185	0.056	0.087	3.867	72.298	0.779	3.5	34	18.5	26	2.906	0.968
0.145	0.15	0.16	0.051	0.075	3.865	72.246	0.782	3.4	34	18.5	26	2.906	0.968
0.143	0.152	0.174	0.041	0.087	3.855	72.385	0.781	3.4	34	18.7	27	2.875	0.955
0.146	0.153	0.158	0.056	0.076	3.872	72.401	0.779	3.3	33	18.7	26	2.875	0.968
0.151	0.155	0.179	0.026	0.093	3.866	72.053	0.779	3.4	33	18.7	27	2.906	0.968
0.144	0.148	0.163	0.053	0.076	3.882	72.204	0.778	3.5	34	18.5	27	2.875	0.968
0.129	0.136	0.181	0.053	0.086	3.86	72.112	0.783	3.4	35	18.6	27	2.875	0.968
0.128	0.131	0.166	0.049	0.075	3.868	72.409	0.782	3.4	33	18.7	27	2.875	0.968
0.149	0.159	0.173	0.039	0.088	3.861	72.274	0.782	3.4	34	18.7	27	2.875	0.968
0.138	0.142	0.162	0.046	0.079	3.865	72.333	0.781	3.4	33	18.5	27	2.875	0.968
0.145	0.151	0.17	0.041	0.087	3.878	72.224	0.779	3.3	33	18.5	26	2.906	0.968
0.133	0.134	0.167	0.055	0.077	3.885	72.302	0.778	3.4	32	18.6	26	2.875	0.955
0.17	0.138	0.16	0.042	0.087	3.88	72.021	0.778	3.3	34	18.7	27	2.906	0.968
0.138	0.14	0.185	0.05	0.089	3.876	72.019	0.783	3.3	34	18.5	27	2.875	0.968
0.143	0.143	0.186	0.052	0.083	3.855	72.074	0.782	3.4	32	18.7	26	2.875	0.968
0.132	0.143	0.167	0.054	0.078	3.891	72.082	0.781	3.4	33	18.7	27	2.906	0.968
0.147	0.148	0.175	0.05	0.092	3.876	71.724	0.78	3.5	32	18.7	26	2.843	0.968
0.131	0.131	0.162	0.043	0.074	3.873	72.456	0.781	3.4	31	18.6	26	2.875	0.955
0.136	0.145	0.183	0.038	0.094	3.861	71.857	0.781	3.3	32	18.51	26	2.906	0.968
0.134	0.141	0.162	0.049	0.077	3.912	72.135	0.777	3.3	33	18.5	26	2.906	0.968
0.148	0.152	0.185	0.023	0.09	3.838	72.612	0.784	3.4	26	18.5	26	2.875	0.955
0.136	0.143	0.166	0.045	0.079	3.866	72.288	0.779	3.5	35	18.7	26	2.875	0.955
0.15	0.158	0.161	0.035	0.088	3.893	72.21	0.779	3.3	34	18.51	26	2.875	0.968
0.131	0.132	0.165	0.04	0.08	3.895	72.177	0.78	3.5	34	18.5	26	2.906	0.955
0.138	0.14	0.185	0.05	0.089	3.876	72.019	0.783	3.3	34	18.5	27	2.875	0.968
0.145	0.145	0.157	0.039	0.082	3.866	72.267	0.782	3.5	31	18.6	26	2.875	0.955
0.136	0.145	0.173	0.04	0.085	3.868	72.154	0.78	3.4	35	18.5	27	2.875	0.968
0.128	0.132	0.166	0.053	0.078	3.9	71.929	0.781	3.4	32	18.6	26	2.906	0.968
0.135	0.138	0.174	0.033	0.086	3.89	72.045	0.778	3.4	32	18.6	26	2.875	0.955
0.141	0.138	0.167	0.055	0.078	3.908	72.135	0.777	3.4	33	18.7	27	2.906	0.955
0.137	0.137	0.166	0.033	0.088	3.865	72.612	0.781	3.5	32	18.7	26	2.843	0.955
0.131	0.138	0.166	0.052	0.076	3.871	72.288	0.782	3.4	31	18.6	26	2.875	0.968
0.131	0.138	0.166	0.052	0.076	3.871	72.21	0.782	3.3	32	18.51	26	2.906	0.955
0.142	0.145	0.161	0.044	0.086	3.871	72.177	0.78	3.3	33	18.5	26	2.906	0.968
0.135	0.143	0.165	0.045	0.08	3.871	72.019	0.78	3.4	26	18.5	26	2.875	0.955
0.135	0.141	0.167	0.051	0.087	3.875	72.267	0.781	3.5	35	18.7	26	2.875	0.968
0.131	0.134	0.155	0.046	0.076	3.868	72.154	0.78	3.3	34	18.51	26	2.875	0.968
0.142	0.145	0.178	0.036	0.085	3.889	71.929	0.777	3.5	34	18.5	26	2.906	0.955
0.133	0.139	0.161	0.045	0.082	3.849	72.135	0.781	3.3	34	18.5	27	2.875	0.955
0.13	0.133	0.156	0.047	0.079	3.861	72.612	0.785	3.5	31	18.6	26	2.875	0.955
0.134	0.134	0.175	0.045	0.083	3.861	72.288	0.784	3.4	35	18.5	27	2.875	0.968
0.132	0.133	0.162	0.041	0.082	3.85	72.21	0.782	3.4	32	18.6	26	2.906	0.955
0.149	0.144	0.172	0.045	0.09	3.879	72.177	0.782	3.3	34	18.5	27	2.875	0.968
0.139	0.143	0.163	0.045	0.078	3.857	72.019	0.78	3.5	31	18.6	26	2.875	0.955
0.144	0.151	0.206	0.041	0.086	3.873	72.267	0.781	3.4	35	18.5	27	2.875	0.968
0.142	0.145	0.159	0.056	0.076	3.873	72.154	0.782	3.4	32	18.6	26	2.906	0.968
0.152	0.161	0.174	0.05	0.094	3.885	71.929	0.781	3.4	35	18.5	27	2.875	0.955
0.138	0.145	0.157	0.046	0.079	3.87	72.045	0.783	3.4	32	18.6	26	2.906	0.958
0.141	0.125	0.163	0.097	0.103	4.83	72.223	0.78	3.3	34	18.5	27	2.875	0.967
0.500	1.200	0.500	1.200	0.340	6.000			5.000	47.000	19.000	35.000	5.000	1.000
						65.000	0.700	2.000	23.000	17.000	19.000		
0.128	0.125	0.155	0.023	0.074	3.838	71.724	0.777	3.300	26.000	18.500	26.000	2.843	0.955
0.170	0.161	0.206	0.097	0.103	4.830	72.612	0.785	3.500	35.000	18.700	27.000	2.906	0.968
0.139	0.142	0.169	0.046	0.083	3.891	72.192	0.781	3.394	32.900	18.577	26.400	2.885	0.963
0.008	0.008	0.010	0.011	0.006	0.136	0.185	0.002	0.071	1.876	0.084	0.495	0.017	0.006
15.20	44.97	10.87	36.62	13.54	5.160	12.925	14.401	7.025	2.132	3.978	5.389	41.034	1.954
								0.071	0.175	0.577	0.075		
15.20	44.97	10.87	36.62	13.54	5.160	12.925	14.401	6.529	1.759	1.683	4.984	41.034	1.954
OK	**OK**	**OK**	**OK**	**OK**	**OK**	**OK**	**OK**	**OK**	**OK**	**OK**	**OK**	**OK**	**OK**

PS-5251-2DS/2DFS PILOT RUN CABLE LENGTH CPK

Customer:DELL UNIT:mm

Item	P1	P2	P3	P4	P5	P6	P7	P8	P9
1	307.0	307.0	135.0	415.0	87.0	521.0	117.0	557.0	85.0
2	310.0	305.0	135.0	415.0	87.0	522.0	116.0	553.0	86.0
3	312.0	304.0	135.0	409.0	87.0	518.0	117.0	552.0	85.0
4	309.0	307.0	134.0	420.0	87.0	518.0	116.0	560.0	85.0
5	310.0	307.0	131.0	419.0	87.0	521.0	117.0	554.0	85.0
6	307.0	306.0	132.0	415.0	87.0	521.0	116.0	557.0	85.0
7	310.0	306.0	134.0	421.0	88.0	521.0	117.0	557.0	85.0
8	310.0	306.0	132.0	423.0	87.0	522.0	117.0	561.0	85.0
9	309.0	305.0	135.0	410.0	87.0	518.0	117.0	552.0	85.0
10	310.0	305.0	133.0	418.0	87.0	518.0	117.0	550.0	85.0
11	309.0	305.0	135.0	418.0	87.0	520.0	116.0	554.0	85.0
12	309.0	308.0	135.0	418.0	87.0	519.0	117.0	551.0	85.0
13	308.0	306.0	135.0	415.0	86.0	518.0	117.0	552.0	85.0
14	310.0	307.0	135.0	414.0	87.0	522.0	117.0	554.0	85.0
15	307.0	305.0	135.0	415.0	86.0	518.0	117.0	548.0	85.0
16	312.0	306.0	135.0	415.0	88.0	520.0	117.0	556.0	86.0
17	313.0	305.0	135.0	415.0	87.0	518.0	117.0	555.0	85.0
18	310.0	305.0	133.0	418.0	87.0	521.0	117.0	552.0	85.0
19	312.0	307.0	133.0	418.0	87.0	522.0	117.0	560.0	86.0
20	313.0	309.0	133.0	417.0	87.0	518.0	116.0	548.0	85.0
21	310.0	306.0	135.0	411.0	87.0	518.0	117.0	551.0	85.0
22	312.0	306.0	133.0	420.0	87.0	520.0	117.0	556.0	85.0
23	309.0	305.0	135.0	418.0	86.0	520.0	117.0	554.0	84.0
24	310.0	306.0	135.0	417.0	86.0	522.0	116.0	548.0	85.0
25	308.0	310.0	134.0	420.0	87.0	519.0	115.0	552.0	85.0
26	313.0	305.0	135.0	415.0	86.0	518.0	117.0	550.0	84.0
27	310.0	309.0	134.0	422.0	87.0	524.0	116.0	559.0	85.0
28	311.0	304.0	134.0	417.0	87.0	522.0	117.0	552.0	85.0
29	311.0	305.0	134.0	416.0	86.0	520.0	115.0	553.0	84.0
30	312.0	308.0	135.0	415.0	87.0	518.0	117.0	554.0	85.0
MAX	313.0	310.0	135.0	423.0	88.0	524.0	117.0	561.0	86.0
MIN	307.0	304.0	131.0	409.0	86.0	518.0	115.0	548.0	84.0
AVG	310.1	306.1	134.1	416.6	86.9	519.9	116.6	553.7	85.0
SIGMA	1.75	1.49	1.14	3.24	0.51	1.77	0.61	3.54	0.45
UCL	317.50	317.50	139.70	419.70	88.90	527.05	120.90	558.80	88.90
LCL	304.80	292.10	127.00	406.40	76.20	514.35	107.90	546.10	76.20
Cpu	1.410	2.566	3.724	0.315	1.336	1.348	2.313	0.477	2.858
Cpl	1.010	3.126	2.092	1.052	7.007	1.046	4.734	0.718	6.449
Cp	1.210	2.846	1.862	0.684	4.171	1.197	3.523	0.598	4.653
Ca	0.165	0.098	0.123	0.539	0.680	0.126	0.344	0.202	0.386
Cpk	1.010	2.566	1.632	0.315	1.336	1.046	2.313	0.477	2.858
Result	OK	OK	OK	FAIL	OK	OK	OK	FAIL	OK

PREPARED BY: 3/28'03 CHECKED BY: 3/1'03 APPROVED BY: 3/6'03

World Class Supplier Process

PROCESS MANAGEMENT PLAN

Part name: Skydive Part name: PS-5251-2DFS DELL P/N: F0894 Customer Rev: A00 Supplier ENG Manager: Robert Wen	Supplier: LITEON CHINA Facility: LITE POWER PLANT III Customer: DELL	Control Location A. Receiving Inspection B. In-Process C. Final Inspection Plan Effective Date: 2/17/03 PMP REV:A

Revision History	Reason for Change	Plan effective date	Revised by	Checked by	Approved by
A	For pilot run	17-Feb-03			

PROCESS MANAGEMENT PLAN

Part Name:SKYDIVE	supplier LITEON CHINA	Control Location
Part Name:PS-5251-2DFS	Facility LITE POWER PLANT	A. Receiving Inspection
Dell P/N: F0894		B. In-Process
Customer Rev: A00		C. Final Inspection
Supplier ENG Manager: Robert Wen	Dell S.Q.A.	Plan Effective Date: 2/17/03 PMP REV:A

Processes		Machine, Device, Jig	Characteristics		Methods						
No	Process Name	Tools for Manufacturing	Process Parameters	Product Characteristics	Product/Process Specification	Evaluation Method	Sample Size	Frequency	Analysis Methods	Reactions If out of Control Conditions are Encountered	Responsible
1	kit (already check-	Visual		Location	Part list	Double check		See INSP.	Goods	Send back the parts	Foreman
	ed by IQC) issued			Part No.				Standard	Receiving	Inform IQC	Line Leader/ ME
	by material store			Description					Note	Pequest for CA from Vendor for all	IQC / ME
				Quantity						nonconformance	
				IQC ACC. sticker							
				Vendor number							
2	Auto insertion	SEQ machine		Comp. damage			100%	Once/4hours	P-chart	When defects over control limit,stop operat-	AI Supervisor
		VCD machine		Comp. missing						ion. Purge units since last inspection sort.	AI Supervisor
		AVK machine		Comp. Reverse						Identify defect trends	ME/AI Supervisor
				Comp. value	MOI	Visual				Implement corrective action .	ME/AI Supervisor
				Polarity		Visual				Verify corrective action.	AI Supervisor
				Lead clinching		Visual					
			Lead length		1.5mm to 2.0mm	Caliper					
3	Radial Insertion	RI Machine		Comp. damage				Once/4hours	P-chart	When defects over control limit,stop operat-	AI Supervisor
				Comp. missing						ion to purge units since last inspection sort.	AI Supervisor
				Comp. Reverse						Implement corrective action .	ME/AI Supervisor
				Comp. value	MOI	Visual				Verify corrective action.	AI Supervisor
				Polarity		Visual					
				Lead clinching		Visual					
			Lead length		1.3mm to 1.8mm	Caliper					
4	Tin test	Equipment		Component test	Parts List	Mirror	100%	Once/2hours	P-chart	When defects over control limit,inform ME	AI Supervisor
		Fixture			MOI					Check the root cause	ME/Technician
										Implement corrective action	ME/AI Supervisor/RM
5	IPQC			Comp. value				See INSP.	MIL-STD-105E	Request AI to rework if rejected.	IPQC engineer
				Polarity		Visual		Standard		Implement corrective action .	AI supervisor
				Lead clinching		Visual				Sorting	AI supervisor

PROCESS MANAGEMENT PLAN

Part Name:SKYDIVE	supplier LITEON CHINA	Control Location
Part Name:PS-5251-2DFS	Facility LITE POWER PLANT	A. Receiving Inspection
Dell P/N: F0894		B. In-Process
Customer Rev: A00		C. Final Inspection
Supplier ENG Manager: Robert Wen	Dell S.Q.A.	Plan Effective Date: 2/17/03 PMP REV:A

Processes		Machine, Device, Jig	Characteristics		Methods						
No	Process Name	Tools for Manufacturing	Process Parameters	Product Characteristics	Product/Process Specification	Evaluation Method	Sample Size	Frequency	Analysis Methods	Reactions If out of Control Conditions are Encountered	Responsible
				Lead length		Caliper				Verify corrective action.	IPQC engineer
6	Preparation	Performing fixture		Comp. value	Part list	Visual	5pcs/part	Once/4hours		When defects found,stop operation	IPQC engineer
				Part No.	Part list	Visual				Purge units since last inspection.	Foreman
				Approval part.	Part list	Visual				Implement corrective action .	ME/Foreman
				Vendor	Part list	Visual				Sort	Foreman
				Comp. lead length	MOI	Steel-ruler				Verify corrective action.	IPQC engineer
				Leads pitch	follow MOI	Steel-ruler					
		Performing machine		Gap width	Lead diameter+1mm	Steel-ruler					
		ES-Driver		Torque	MOI	Torque meter		Once/4hours	check record		
				Thermal Grease	100%	Visual					
7	Hand insertion			Comp. damage		FAI sample	100%	Once/shift		When defects found,stop operation	Foreman
				Comp. missing		H/I Sample	100%	Once/shift		Check the root cause of the problem	Foreman / ME
				Comp. Reverse		Cross Check	100%	Once/shift		and take corrective action.	
				Comp. value	MOI					Verify corrective action.	Foreman
				Polarity	MOI	Visual					
8	H/I LQC			Comp. placement /	MOI	Visual		Once/2hours	check record	When defects over control limit stop line.	Foreman
				Orientation / value					P-chart	Check the root cause of the problem	ME/ Foreman
										and take corrective action.	
										Verify corrective action.	Foreman
9	Wave soldering	Wave soldering	Track width		160+1/-0mm	PCB		4 times/daily			
		machine	Solder temp.		245+/-5 deg				X-R chart	when defects over control limit,	IPQC engineer
		Flux controller	Belt Speed		1.40+/-0.2 m/min				X-R chart	stop line.	
			Preheat temp.		450+10/-20 deg	Thermometer			X-R chart	Check the root cause and take	RM engineer
			Flux density		0.842+/-0.04	hydrometer		Once/2hours	Check record	Verify corrective action.	IPQC engineer
				Solder quality	workmanship		20 units	Once/2hours		when defects over control limit:3000	IPQC engineer
					-standard					dppm, stop line.	

PROCESS MANAGEMENT PLAN

Part Name:SKYDIVE	supplier LITEON CHINA	Control Location
Part Name:PS-5251-2DFS	Facility LITE POWER PLANT	A. Receiving Inspection
Dell P/N: F0894		B. In-Process
Customer Rev: A00		C. Final Inspection
Supplier ENG Manager: Robert Wen	Dell S.Q.A.	Plan Effective Date: 2/17/03 PMP REV:A

Processes		Machine, Device, Jig	Characteristics		Methods						
No	Process Name	Tools for Manufacturing	Process Parameters	Product Characteristics	Product/Process Specification	Evaluation Method	Sample Size	Frequency	Analysis Methods	Reactions If out of Control Conditions are Encountered	Responsible
										Check the root cause of the problem	RM engineer
										and take corrective action.	
										Verify corrective action	IPQC engineer
10	Touch-up	Soldering Iron	Solder temp.		350 deg.-380 deg.	Temp. Tester	100%	Once/4hours	check record	stop operation	Foreman
		Soldering gun								purge units since last inspection	Foreman
		yellow glue gun								check the purged units and decide	ME/ Line Leader/ QE
										rework or not	
										Correct iron temp.	Foreman/ operator
										verify iron temp.	Line Leader/Foreman
										Rework if necessary	Line Leader/Foreman
				Solder workmanship	workmanship	Visual	100%			When defects over control limit,stop line for	Line leader / ME
					-standard					corrective action and containment.	
11	LQC	Visual		Check solder short/	Workmanship-	MOI	100%	Once/2hours	Check records	When defects over control limit,stop line	Line leader
		Ampilier		solder crack/splash	standard				p-chart	for corrective action and containment.	
				copper lifted/							
				button joints							
12	ICT	Test fixture		Short test	MOI	On screen	100%	Once/2hours	P-Chart	Verify defect rate	Foreman
		PC		Open test							
		ICT system		Component						When defects over control limit,stop line	Line leader
										for corrective action and containment.	Foreman
											Technician / PE
13	Initial Test	Test fixture	Input voltage	+5V/+12V/+3.3V/5Vs	Vin= 230VAC MOI	On screen	100%	Once/2hours	P-Chart	When defect rate over control limit ,	Foreman
	(adjustment)	Auto-release Jig		&-12V							
		PC	Hold On Adjust	+12V	(11.60~11.62V)	Indicator				stop line.troubleshoot failures	Technician / PE
		AC source		+12V OLP point	18.5A	Indicator				identify defect trends	PE

PROCESS MANAGEMENT PLAN

Part Name:SKYDIVE	supplier LITEON CHINA	Control Location
Part Name:PS-5251-2DFS	Facility LITE POWER PLANT	A. Receiving Inspection
Dell P/N: F0894		B. In-Process
Customer Rev: A00		C. Final Inspection
Supplier ENG Manager: Robert Wen	Dell S.Q.A.	Plan Effective Date: 2/17/03 PMP REV:A

Processes		Machine, Device, Jig	Characteristics		Methods						
No	Process Name	Tools for Manufacturing	Process Parameters	Product Characteristics	Product/Process Specification	Evaluation Method	Sample Size	Frequency	Analysis Methods	Reactions If out of Control Conditions are Encountered	Responsible
		EMU	Load regulation	+5V	+/-5%					Implement corrective action.	Line leader / PE
				+12V	+/-5%	Pass/fail on				Verify defect rate < control limit	Foreman / PE
				+5Vs	+/-5%	screen					
				+3.3V	+/-5%						
				-12V	+/-10%						
						Go/NG sample					
14	Case	ES-Driver for	Torque		MOI	Torque meter	100%	Once/4hours	Check records	stop operation	Foreman
	Assembly									purge units since last inspection	Foreman
		fan,inlet, sw, PCB, case								correct torque	Foreman/operator
		pfc, and ground wire								verify correct driver setting	Line Leader/Foreman
										rework units	Foreman/operator
		Soldering iron	Solder temp.		350-380 deg.	Temp. tester	100%	2 times/day	check record	stop operation	Foreman
		soldering gun								purge units since last inspection	Foreman
										check the purged units and decide	ME/ Line Leader/QE
										rework or not	
										Correct iron temp.	Foreman/operator
										verify iron temp.	Line Leader/Foreman
										Rework if necessary	Foreman/operator
15	LQC			Assembly	MOI	Visual	100%	Once/2hours	Check records	When defects over control limit,stop line	Foreman
				workmanship					P-Chart	Identify defect trends	ME / Line Leader
										Implement correct action	Foreman/operator
										Verify defect rate	Foreman
16	Vibration test	Vibration test equipment	Functionally	Input voltage	230Vac	Pass/fail show	100%	Once/2hours	Pass/Fail	When defect rate over control limit ,stop line.	Foreman
		PC	Timing	Starting Freq.	10Hz	on screen			P-chart	troubleshoot failures	Technician / PE
		Auto-release Jig	Load regulation	Stop Freq.	55Hz					identify defect trends	PE
		Bar Code Reader	Efficiency(1W)	Test time	0.5Min					Implement corrective action.	Line Leader / PE
			+5V +12V and	Amplitude	0.075mm					Verify defect rate <control limit.	Foreman / PE

PROCESS MANAGEMENT PLAN

Part Name:SKYDIVE	supplier LITEON CHINA	Control Location
Part Name:PS-5251-2DFS	Facility LITE POWER PLANT	A. Receiving Inspection
Dell P/N: F0894		B. In-Process
Customer Rev: A00		C. Final Inspection
Supplier ENG Manager: Robert Wen	Dell S.Q.A.	Plan Effective Date: 2/17/03 PMP REV:A

Processes		Machine, Device, Jig	Characteristics		Methods						
No	Process Name	Tools for Manufacturing	Process Parameters	Product Characteristics	Product/Process Specification	Evaluation Method	Sample Size	Frequency	Analysis Methods	Reactions If out of Control Conditions are Encountered	Responsible
			+3.3V OLP								
17	Harmonic test 1	Harmonic tester	1. 75W	230Vac/50Hz	Pin ≧ 75W	Reading value show				When defect rate over control limit,stop line.	Foreman
		AC source		+5v/5A,+12v/1A,		on screen				troubleshoot failures	Technician / PE
		Auto-release Jig		+3.3v/4.1A,-12v/0.1A						identify defect trends	Line Leader / PE
				5Vs/0.5A						Implement corrective action.	Line Leader / PE
			2. full load	+5v/20A,+12v/6A,	PF≧0.7					Verify defect rate < control limit.	ME / Foreman
				+3.3v/15A,-12V/1A							
				5Vs/2A							
18	Hi-pot & GND test 1	Grounding tester	Ampere		25 amp. min.	Pass/fail show	100%	Once/2hours		When defect found, stop operation	Foreman
		PC	Trip resistance		100 mohm max.	on the screen				troubleshoot failure	Technician / PE
		Hi-pot Tester	Pri. to Ground		Test volt. 1800Vac	and alarm	100%	Once/2hours		identify defect trends	Line Leader / PE
		Bar Code Reader	Pri. to secondary		Test volt. 1800Vac					implement corrective action	Line Leader / PE
		Auto-release Jig	Trip current		3~10 microamp.					verify the corrective action	ME / Foreman
						Go/NG sample					
19	SCP test 1	Test fixture	Functionally	Input voltage	230Vac			Once/2hours	Pass/Fail	When defect rate over control limit ,stop line.	Foreman
		Auto-release Jig	SCP	+5V,+12V,+3.3V,-12V	SPS must shut down				P-chart	troubleshoot failures	ME / Line Leader
		Bar Code Reader		& +5Vs						identify defect trends	Line Leader / PE
20	OVP test 1	Test fixture	Functionally	Input voltage	230Vac	Pass/fail show	100%	Once/2hours	P-chart	When defect rate over control limit,stop line.	Foreman
		Auto-release Jig	OVP	+5V,+12V,+3.3V	SPS must shut down	on the screen				troubleshoot failures	Technician / PE
		Bar Code Reader	OVP			Pass/fail show				identify defect trends	Line Leader / PE
		PC				on the screen				Implement corrective action.	Line Leader / PE
						indicator				Verify defect rate < control limit.	ME / Foreman
21	ATE 1	ATE equipment	Functionally	Input voltage	230Vac	pass/fail test	100%	Once/2hours	Pass/Fail	When defect rate over control limit ,stop line.	Foreman
		Auto-release Jig		Frequency	47-63Hz				P-chart	troubleshoot failures	ME / Line Leader
		Bar Code Reader		Loading	Product spec.					identify defect trends	Line Leader / PE

PROCESS MANAGEMENT PLAN

Part Name:SKYDIVE	supplier LITEON CHINA	Control Location
Part Name:PS-5251-2DFS	Facility LITE POWER PLANT	A. Receiving Inspection
Dell P/N: F0894		B. In-Process
Customer Rev: A00		C. Final Inspection
Supplier ENG Manager: Robert Wen	Dell S.Q.A.	Plan Effective Date: 2/17/03 PMP REV:A

Processes		Machine, Device, Jig	Characteristics		Methods						
No	Process Name	Tools for Manufacturing	Process Parameters	Product Characteristics	Product/Process Specification	Evaluation Method	Sample Size	Frequency	Analysis Methods	Reactions If out of Control Conditions are Encountered	Responsible
		PC		Timing test	Product spec.					Implement corrective action.	Line Leader / PE
				SPS efficiency	Product spec.					Verify defect rate < control limit.	ME / Foreman
				Comt Regulation	Product spec.						
				OLP test	Product spec.						
				Vibration		manual					
				Fan noise		listen					
						Go/NG sample					
22	Burn-in test	Burn-in room	Functionally	Input	230Vac	LED	100%	Once/2hours	Burn-in	When defect found, inform PE assistant	Foreman
		Bar Code Reader		Output Voltage	+5V/10A				record	engineer	
				Regulation	+12V/12A				P-chart	troubleshoot failure	Technician / PE
					-12V/0.75A					implement corrective action	Line Leader / PE
					+3.3V/10A					verify the corrective action	Foreman / PE
					+5Vs/1.7A						
		Temp. meter		Temperature	45+5/-5 deg C.	Temp. display					
		Timer		Time	24 hours						
				on/off	on 25 Min and						
					then on/off 5 times in						
					5 Min (48 cycles)						
23	Cable Length	Measure Cable Fixture		p1	304.8+12.7/-0mm	Visual			Inspection	When defects over control limit,stop line	Foreman
				p2	304.8+/-12.7mm				Record	Identify defect trends	ME / Line Leader
				p3	127+12.7/-0mm					Implement correct action	Foreman/operator
				p4	406.4+12.7/-0mm						
				p5	76.2+12.7/-0mm						
				p6	514.35+12.7/-0mm						
				p7	107.9+12.7/-0mm						
				p8	546.1+12.7/-0mm						
				p9	76.2+12.7/-0mm						
24	Harmonic test 2	Harmonic tester	1. 75W	100Vac/50Hz	Pin ≧ 75W	Reading value show				When defect rate over control limit,stop line.	Foreman

PROCESS MANAGEMENT PLAN

Part Name:SKYDIVE	supplier LITEON CHINA	Control Location
Part Name:PS-5251-2DFS	Facility LITE POWER PLANT	A. Receiving Inspection
Dell P/N: F0894		B. In-Process
Customer Rev: A00		C. Final Inspection
Supplier ENG Manager: Robert Wen	Dell S.Q.A.	Plan Effective Date: 2/17/03 PMP REV:A

Processes		Machine, Device, Jig	Characteristics		Methods						
No	Process Name	Tools for Manufacturing	Process Parameters	Product Characteristics	Product/Process Specification	Evaluation Method	Sample Size	Frequency	Analysis Methods	Reactions If out of Control Conditions are Encountered	Responsible
		AC source		+5v/5A,+12v/1A,		on screen				troubleshoot failures	Technician / PE
		Auto-release Jig		+3.3v/4.1A,-12v/0.1A						identify defect trends	Line Leader / PE
				5Vs/0.5A						Implement corrective action	Line Leader / PE
			2. full load	+5v/20A,+12v/6A,	PF≥0.7					Verify defect rate < control limit.	ME / Foreman
				+3.3v/15A,-12V/1A							
				5Vs/2A							
25	Hi-pot & GND test 2	Grounding tester	Ampere		25 amp. min.	Pass/fail show	100%	Once/2hours		When defect found, stop operation	Foreman
		PC	Trip resistance		100 mohm max.	on the screen				troubleshoot failure	Technician / PE
		Hi-pot Tester	Pri. to Ground		Test volt. 1800Vac	and alarm	100%	Once/2hours		identify defect trends	Line Leader / PE
		Bar Code Reader	Pri. to secondary		Test volt. 1800Vac					Implement corrective action	Line Leader / PE
		Auto-release Jig	Trip current		3~10 microamp.					verify the corrective action	ME / Foreman
						Go/NG sample					
26	SCP test 2	Test fixture	Functionally	Input voltage	115Vac			Once/2hours	Pass/Fail	When defect rate over control limit ,stop line.	Foreman
		Auto-release Jig	SCP	+5V,+12V,+3.3V,-12V	SPS must shut down				P-chart	troubleshoot failures	ME / Line Leader
		Bar Code Reader		&+5Vs						identify defect trends	Line Leader / PE
27	OVP test 2	Test fixture	Functionally	Input voltage	115Vac	Pass/fail show	100%	Once/2hours	P-chart	When defect rate over control limit,stop line.	Foreman
		Auto-release Jig	OVP	+5V,+12V,+3.3V	SPS must shut down	on the screen				troubleshoot failures	Technician / PE
		Bar Code Reader				Pass/fail show				identify defect trends	Line Leader / PE
		PC				on the screen				Implement corrective action.	Line Leader / PE
						indicator				Verify defect rate < control limit.	ME / Foreman
28	ATE 2	ATE equipment	Functionally	Input voltage	115Vac	pass/fail test	100%	Once/2hours	Pass/Fail	When defect rate over control limit ,stop line.	Foreman
		Auto-release Jig		Frequency	47-63Hz				P-chart	troubleshoot failures	ME / Line Leader
		Bar Code Reader		Loading	Product spec.					identify defect trends	Line Leader / PE
		PC		Timing test	Product spec.					Implement corrective action.	Line Leader / PE
				SPS efficiency	Product spec.					Verify defect rate < control limit.	ME / Foreman

PROCESS MANAGEMENT PLAN

Part Name:SKYDIVE	supplier LITEON CHINA	Control Location
Part Name:PS-5251-2DFS	Facility LITE POWER PLANT	A. Receiving Inspection
Dell P/N: F0894		B. In-Process
Customer Rev: A00		C. Final Inspection
Supplier ENG Manager: Robert Wen	Dell S.Q.A.	Plan Effective Date: 2/17/03 PMP REV:A

Processes		Machine, Device, Jig	Characteristics		Methods						
No	Process Name	Tools for Manufacturing	Process Parameters	Product Characteristics	Product/Process Specification	Evaluation Method	Sample Size	Frequency	Analysis Methods	Reactions If out of Control Conditions are Encountered	Responsible
				Comb. Regulation	Product spec.						
				OLP test	Product spec.						
				Power Saving Test	Product spec.						
				Vibration		manual					
				Fan noise		listen					
						Go/NG sample					
29	Power test	Function fixture		Input voltage	115Vac/60Hz			Once/2hours	Pass/Fail	When defect rate over control limit ,stop line.	Foreman
		Auto-release Jig		Wire test					P-chart	troubleshoot failures	ME / Line Leader
				Shock test						identify defect trends	Line Leader / PE
30	Connector and	Visual		Color/length.		Visual	100%		Check Record	When defect rate over control limit,stop line.	Foreman
	wire checking			location		Record				Check the root cause and take	Foreman / ME
				Stamp marking		Visual	100%			corrective action and containment.	
						Record				Verify corrective action.	Foreman
31	Stick label	Visual		Printing of labels	Workmanship-	Visual	100%			When defect sticker found inform PK	Operator
		Stick lable fixture			standard					leader.	
										Check the root cause and take corrective	Foreman
										action and verify corrective action.	
32	Packing LQC	Visual		SPS structure	Workmanship-	Visual	100%	Once/2hours	LQC record	When defects over control limit,stop line	Foreman
					standard				P-Chart	Implement correct action	ME / Foreman
										Verify defect rate	ME / Foreman
33	On line OQC.	Power testing		Electric function	OOBA checklist			Lot size:720	OQC inspection	When defect found inform engineering	OQC supervisor
		GND tester		safety requirement	product spec.	Tester		Sample size:50	report	reject sampling lot	OQC supervisor
		Hi-pot tester			product spec.	Visual				search root cause and give rework flow	ENG engineer

PROCESS MANAGEMENT PLAN

Part Name:SKYDIVE	supplier LITEON CHINA	Control Location
Part Name:PS-5251-2DFS	Facility LITE POWER PLANT	A. Receiving Inspection
Dell P/N: F0894		B. In-Process
Customer Rev: A00		C. Final Inspection
Supplier ENG Manager: Robert Wen	Dell S.Q.A.	Plan Effective Date: 2/17/03 PMP REV:A

Processes		Machine, Device, Jig	Characteristics		Methods						
No	Process Name	Tools for Manufacturing	Process Parameters	Product Characteristics	Product/Process Specification	Evaluation Method	Sample Size	Frequency	Analysis Methods	Reactions If out of Control Conditions are Encountered	Responsible
		Electronic-load			product spec.					rework sampling lot	foreman
		Test fixture		output wire harness	product spec.					implement corrective action	MFG supervisor
		Measuring tape		Tape location	Appearance drawing					verify	IPQC engineer
		Caliper / ruler		mechanical size	Appearance drawing						
		Revision		Label print							
		Caliber gauge		pin hole dimensions	1.97mm-2.03mm						